Electronic switch insert, 1-channel, with satellite input



Reference number:	1704 ESE
EAN/GTIN:	4011377166899

with satellite input
for covers JUNG HOME ref.-no.: BT .. 17101 .., BT .. 17102 .., BT .. 17181 .., BT .. 17182 .., BT .. 1791 .., BT 17361 ..
for covers eNet ref.-no.: FM .. 1700 .., FM .. 1701 ..
for covers LB Management ref.-no.: .. 1700 .., .. 1750 D .., .. 17180 .., .. 17280 .., .. 1790 D ..
for covers KNX RF ref.-no.: .. 1091 1ST RF .., .. 1092 1ST RF ..

Intended use
- Operation with suitable cover
- Installation in flush box with dimensions according to DIN 49073

Operation with neutral conductor:
- Switching of incandescent lamps, HV halogen lamps, electronic or inductive transformers with halogen or LED lamps, switchable or dimmable HV-LED or compact fluorescent lamps

Operation without neutral conductor:
- Switching of incandescent lamps, HV halogen lamps, electronic or inductive transformers with halogen or LED lamps, dimmable HV-LED or compact fluorescent lamps

Product characteristics
- Switch-on via bulb-preserving soft start
- Connection of satellite units possible
- Electronic short-circuit protection with permanent switch-off after 7 seconds at the latest
- Electronic over-temperature protection
- Test operation for functional test
- Device is powered via line conductor and neutral conductor , therefore there is no leading edge phase control or trailing edge phase control
- Device is powered via the line conductor and the connected load and therefore works in the leading edge phase control or trailing edge phase control principle
- Automatic or manual setting of the operating mode suitable for the load
- Display of the set operating mode by means of LED

Technical data

Rated voltage:	AC 230 V ~
Mains frequency:	50/60 Hz
Stand-by power:	approx. 0.25 W
Power loss:	approx. 4 W
Ambient temperature:	-5 ... +45 °C
Connected load at 25 °C	

Incandescent lamps:	20 ... 400 W
HV halogen lamps:	20 ... 400 W
Electronic transformers:	20 ... 400 W
Electronic transformers with LV LED:	20 ... 100 W
Inductive transformers:	20 ... 400 VA
Inductive transformers with LV LED:	20 ... 100 VA
HV LED lamps:	typical 3 ... 100 W
Compact fluorescent lamps:	typical 3 ... 100 W
When operating with neutral conductor or without neutral conductor in operating mode LED trailing edge phase control: Connection power for HV LED lamps typ. 3 ... 200 W, electronic transformers with LV LED typ. 20 ... 200 W.	
Ohmic-capacitive:	20 ... 400 W
Capacitive-inductive:	not permitted
Ohmic-inductive:	20 ... 400 VA
Ohmic and HV LED:	typical 3 ... 100 W
Ohmic and CFL:	typical 3 ... 100 W
Connection	screw terminals
Number of valve drives:	1 ... 10
Number of satellite units	
Satellite insert 2-wire 1720 NE:	unlimited
Satellite insert 3-wire 1723 NE:	5
Push-buttons:	unlimited
Total length of satellite cable:	max. 100 m
Total length power cable:	max. 100 m

Assembly

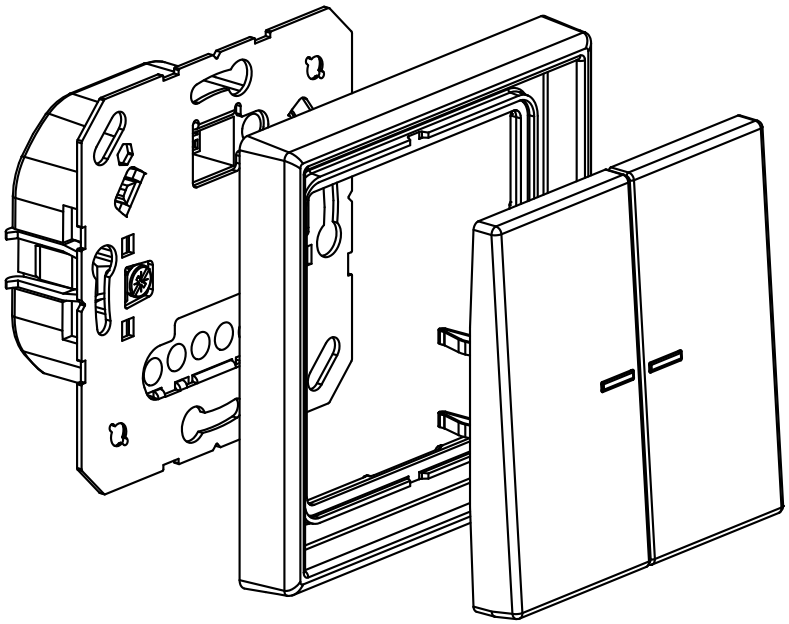

ALBRECHT JUNG GMBH & CO. KG | Volmestraße 1 | 58579 Schalksmühle | GERMANY 01/2023