Pulse insert



Reference number:	1708 IE
EAN/GTIN:	4011377166967

for covers LB Management ref.-no.: .. 1700 .., .. 17180 .., .. 17280 ..

Intended use
- Manual or automatic control of the power unit ref.-no. 1208 REG
- Operation with suitable cover
- Installation in flush box with dimensions according to DIN 49073

Product characteristics
- Manual switching in combination with LB Management push-button 1-gang ref.-no.: .. 1700 .., .. 1700 P ..
- Automatic switching in combination with motion detectors of the LB Management
- Operation in 3- or 4-conductor circuit
- Insert designed with 2-wire technology

Technical data

Rated voltage:	AC 230 V ~
Mains frequency:	50 Hz
Power consumption:	0.25 ... 0.45 W
Current consumption:	approx. 2.8 mA
Ambient temperature:	-5 ... +45 °C
Pulse duration:	approx. 60 ms
Pulse interval:	approx. 8 s
Connection	screw terminals

ALBRECHT JUNG GMBH & CO. KG
Volmestraße 1
58579 Schalksmühle

Phone +49 (0) 23 55/80 60
E-Mail kundencenter@jung.de

Assembly

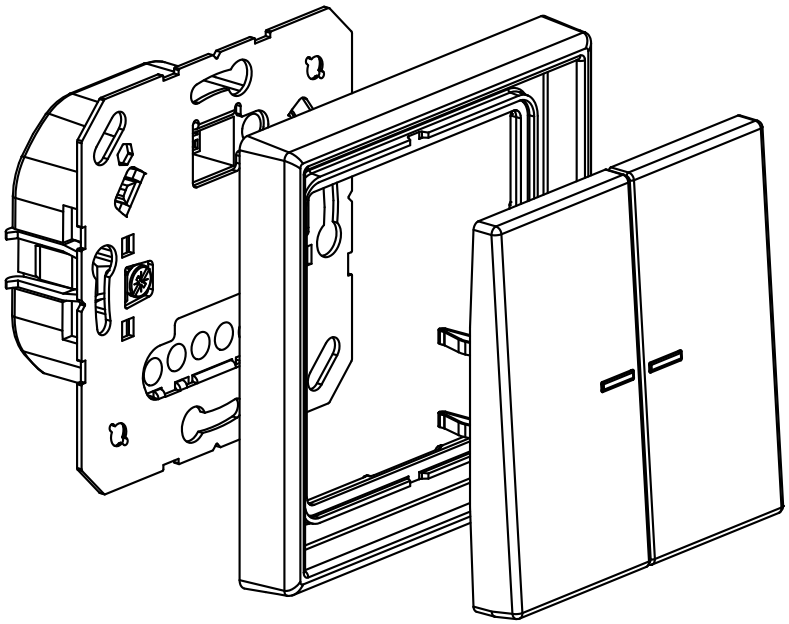

ALBRECHT JUNG GMBH & CO. KG | Volmestraße 1 | 58579 Schalksmühle | GERMANY 01/2023