DALI rotary controller TW



Reference number:	1740 DSTE
EAN/GTIN:	4011377206540

DALI-2 single-master

Intended use
- Brightness setting for luminaires with DALI interface
- Setting of colour temperature for luminaires with DALI Device Type 8 for tunable white acc. to IEC 62386-209
- Installation in flush box with dimensions according to DIN 49073

Product characteristics
- The DALI rotary controller TW takes power from the DALI voltage, which must be supplied by an external DALI power supply in accordance with IEC 62386-101.
- Saving of colour temperature limiting values
- Saving of basic brightness and switch-on brightness
- Certified acc. to IEC 62386-101 and -103 (Single Master)
- The device functions as a DALI-2 single-master and should not be combined with other DALI controllers

Centre plates:
AS / A ranges: ref.-no. A 1740 ..
CD range: ref.-no. CD 1740 ..
LS range: ref.-no. LS 1740 .., .. 1740 ..

Technical data

Rated voltage DALI:	DC 16 V (typ.)
Power consumption:	max. 2 W
Ambient temperature:	-5 ... +45 °C
Colour temperature setting:	2,000 ... 10,000 K

ALBRECHT JUNG GMBH & CO. KG
Volmestraße 1
58579 Schalksmühle
Phone +49 (0) 23 55/80 60
E-Mail kundencenter@jung.de

Assembly

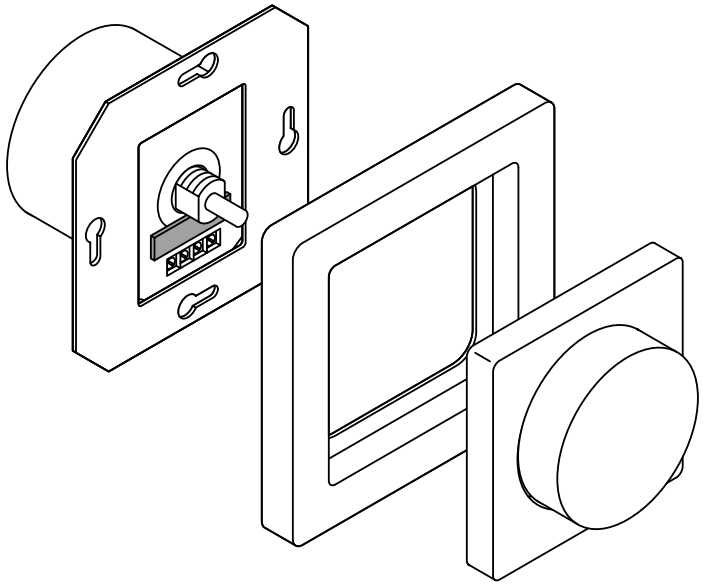

ALBRECHT JUNG GMBH & CO. KG | Volmestraße 1 | 58579 Schalksmühle | GERMANY 02/2023

ALBRECHT JUNG GMBH & CO. KG
Volmestraße 1
58579 Schalksmühle
Phone +49 (0) 23 55/80 60
E-Mail kundencenter@jung.de