Universal rotary dimmer LED, flush-mounted



Reference number:	1731 DD
EAN/GTIN:	4011377166981

R,L,C LED

incremental control without end position
with satellite input

Intended use
- Switching and dimming of lighting
- Operation with suitable cover
- Installation in flush box with dimensions according to DIN 49073

Product characteristics
- Device works according to the leading edge phase control or trailing edge phase control principle
- Automatic or manual setting of the dimming principle suitable for the load
- Display of the set operating mode by means of LED
- Device can be operated without neutral conductor
- Switch-on via bulb-preserving soft start
- Switch-on with last brightness or saved switch-on brightness
- Switch-on brightness can be saved permanently
- Minimum brightness can be saved permanently
- Maximum brightness can be saved permanently
- Connection of satellite units possible
- Electronic short-circuit protection with permanent switch-off after 7 seconds at the latest
- Electronic over-temperature protection
- Key card function
- Power extension possible by means of amplifiers (ref.-no. ULZ 1755 REG)
- Optional accessory: compensation module LED, ref.-no.: KM LED 230 U

Centre plates:
AS / A ranges: ref.-no. A 1740 ..
CD range: ref.-no. CD 1740 ..
LS range: ref.-no. LS 1740 .., .. 1740 ..

Technical data

Rated voltage:	230 V ~
Mains frequency:	50/60 Hz

Stand-by power:	approx. 0.35 W
Power loss:	approx. 4 W
Ambient temperature:	-5 ... +45 °C
Connected load at 25 °C	
Incandescent lamps:	20 ... 420 W
HV halogen lamps:	20 ... 420 W
Electronic transformers:	20 ... 420 W
Electronic transformers with LV LED:	typical 20 ... 100 W
Inductive transformers:	20 ... 420 VA
Inductive transformers with LV LED:	typical 20 ... 100 VA
Dimmable HV LED lamps:	typical 3 ... 100 W
Dimmable compact fluorescent lamps:	typical 3 ... 100 W
Operating mode LED trailing edge phase control: Rated power for HV LED lamps, typ. 3 ... 400 W, electronic transformers with LV LED typ. 20 ... 200 W.	
Ohmic-capacitive:	20 ... 420 W
Capacitive-inductive:	not permitted
Ohmic-inductive:	20 ... 420 VA
Ohmic and HV LED:	typical 3 ... 100 W
Ohmic and CFL:	typical 3 ... 100 W
Amplifiers:	see instructions for amplifier
Connection	screw terminals
Number of satellite units	
Rotary satellite insert 3-wire 1733 DNE:	10
Satellite insert 3-wire 1723 NE:	10
Satellite insert 2-wire 1720 NE:	unlimited
Push-buttons:	unlimited
Total length of satellite cable:	max. 100 m
Total length power cable:	max. 100 m

Assembly

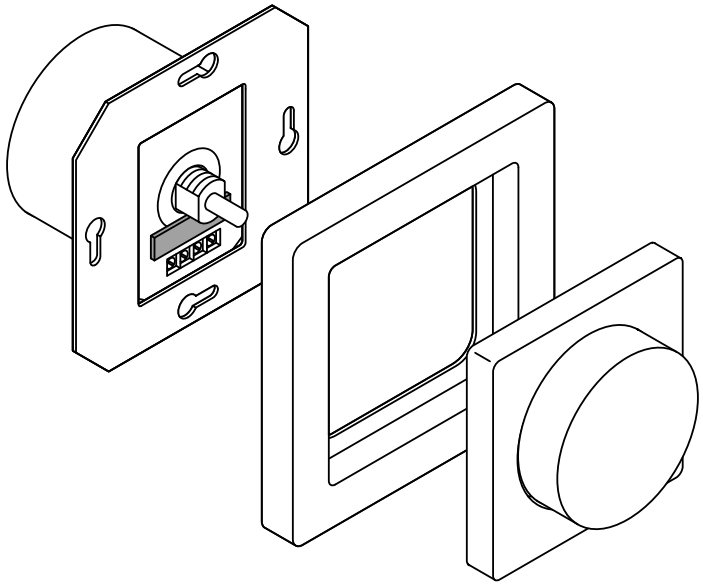

ALBRECHT JUNG GMBH & CO. KG | Volmestraße 1 | 58579 Schalksmühle | GERMANY 02/2023