2-gang multi push-button (insert), 2 x 1-pole, 2-way push-button with 4 floating 1-way NO contacts, rocker in neutral position, 10 A 250 V ~



Reference number:	532-4 U
EAN/GTIN:	4011377021044

with screw terminals for rigid and flexible wires up to 2.5 mm^2

Especially designed as controller for wirings with relays, e.g. in combination with relay station ref.-no. RS 8 REGHE.
No electrical/mechanical interlocking.
Only recommended for CD and LS ranges (except metal versions).

Assembly

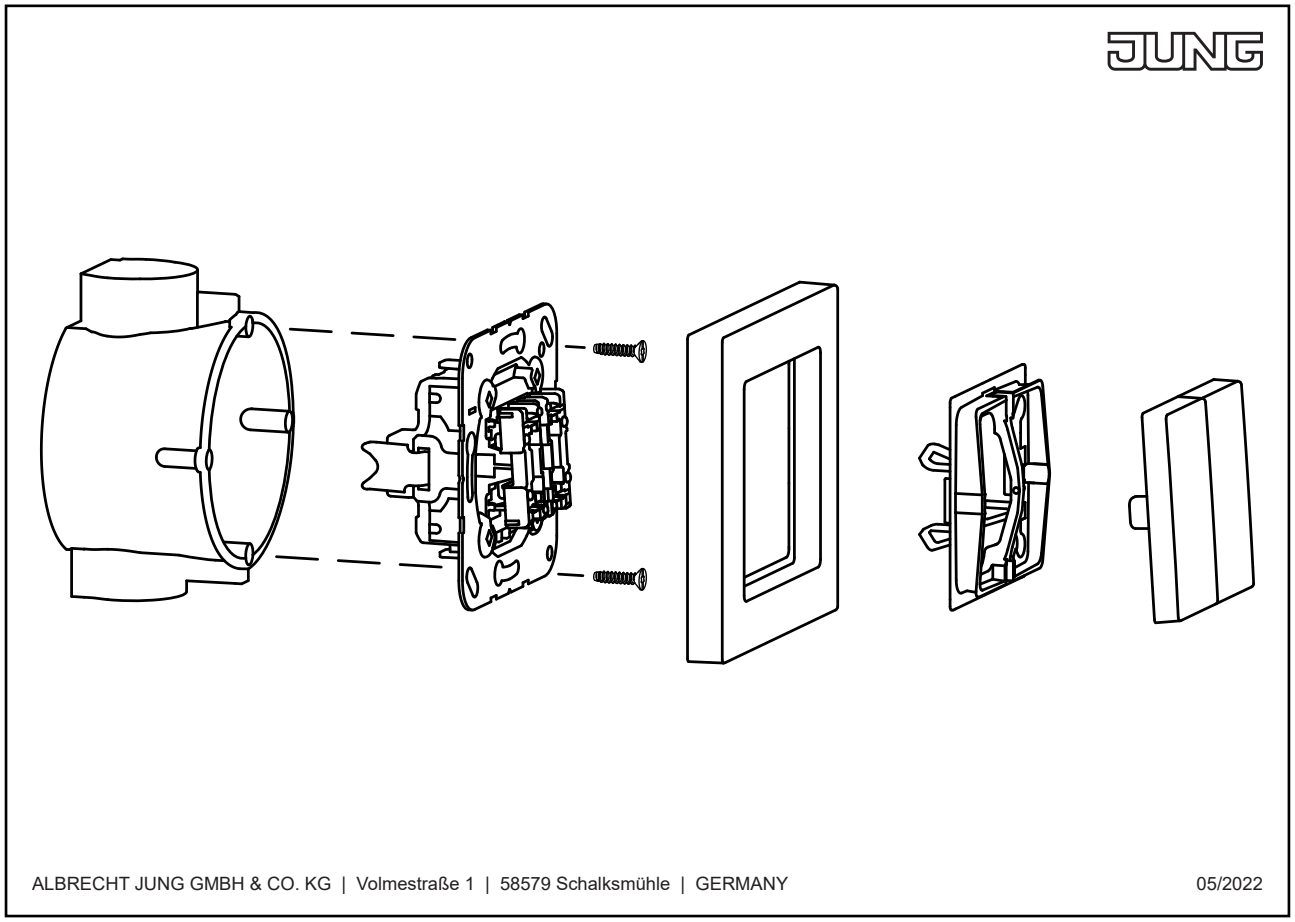

Notice!
Installation only by persons with relevant electrical knowledge and experience!*)
Use only with original JUNG product components approved for this article.
By inappropriate installation you endanger
• your own life,
• the life of the user of the electrical appliance.
By inappropriate installation you risk a high loss by damage, e.g. risk by fire.
You assume personal liability in cause of injury to persons or damage of appliances.
Please contact a skilled electrician!

***) Required technical knowledge for installation:**
For installation, especially the following technical knowledge is required:
• the 5 important safety rules: disconnect from mains, secure against reconnecting, verify parts are free of voltage, ground and short-circuit, cover or block off adjacent live parts
• select adequate tools, measuring devices and personal protective equipment
• evaluate measuring results
• selection of the electrical installation material to secure switch-off conditions
• IP protection levels
• installation of the electrical installation material
• type of electric power grid (TN system, IT system, TT system) and the resultant connection terms (common grounding, protective ground, required additional action etc.)

ALBRECHT JUNG GMBH & CO. KG
Volmestraße 1
58579 Schalksmühle
Phone +49 (0) 23 55/80 60
E-Mail kundencenter@jung.de