1-gang switch (insert) 10 AX 250 V~, intermediate, without claws

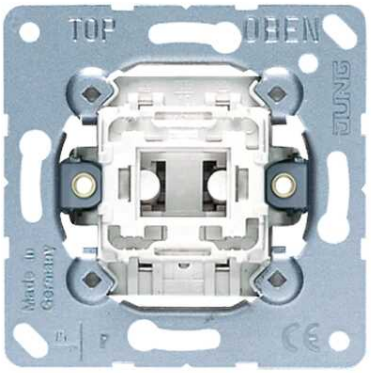

Reference number:	507 EU
EAN/GTIN:	4011377263000
Power SBL (self-ballasted lamps):	max. 100 W

with screwless terminals for rigid wires up to 2.5 mm^2

Switch can be illuminated in OFF-position with lamp ref.-no. 90/95 (230 V), 96-.. (low voltage), or LED lamp ref.-no. 90-LED.. (230 V) or 961248 LED.. (low voltage).

Assembly

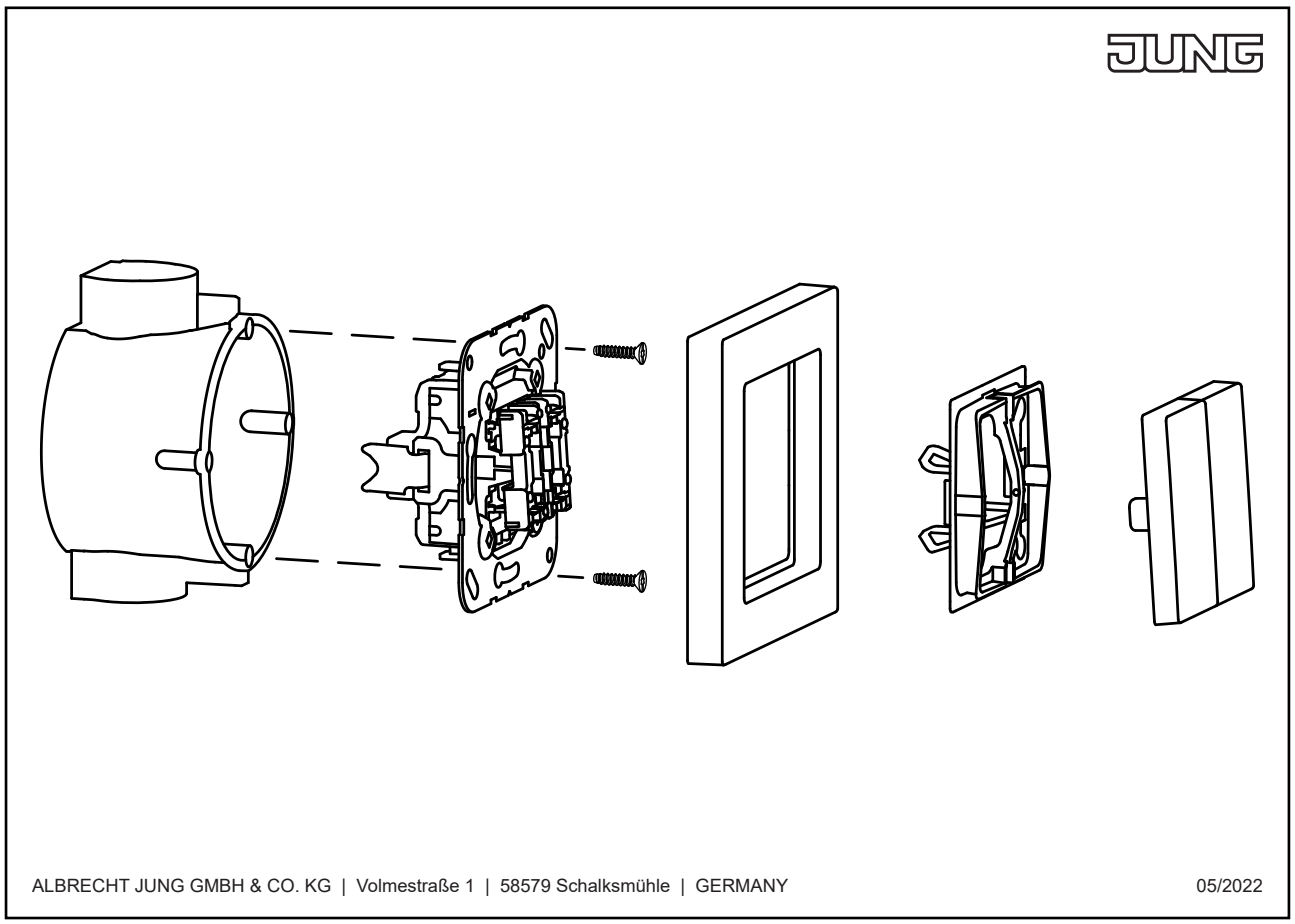

Notice!
Installation only by persons with relevant electrical knowledge and experience!*)
Use only with original JUNG product components approved for this article.
By inappropriate installation you endanger

ALBRECHT JUNG GMBH & CO. KG
Volmestraße 1
58579 Schalksmühle
Phone +49 (0) 23 55/80 60
E-Mail kundencenter@jung.de

• your own life,
• the life of the user of the electrical appliance.
By inappropriate installation you risk a high loss by damage, e.g. risk by fire.
You assume personal liability in cause of injury to persons or damage of appliances.
Please contact a skilled electrician!

***) Required technical knowledge for installation:**
For installation, especially the following technical knowledge is required:
• the 5 important safety rules: disconnect from mains, secure against reconnecting, verify parts are free of voltage, ground and short-circuit, cover or block off adjacent live parts
• select adequate tools, measuring devices and personal protective equipment
• evaluate measuring results
• selection of the electrical installation material to secure switch-off conditions
• IP protection levels
• installation of the electrical installation material
• type of electric power grid (TN system, IT system, TT system) and the resultant connection terms (common grounding, protective ground, required additional action etc.)