LED Driver - dimmable, 8-20W

Technical data

Primary voltage	220-240VAC
Secondary amperage	350mA
Min. load	8W
Max. load	20W
Efficiency	>89%
Fuse	Built-in thermal fuse with auto reset
Max. number on C10 fuse	53 pcs.
Max. number on C16 fuse	85 pcs.
Distribution box on secondary side	Yes, with 6 outputs
Cable from the secondary side	Yes, 11.5 cm to distribution box
Possibility of attachment	Yes, using two screws (not included)
Dimensions driver	L: 108 mm, B: 52 mm, H: 22 mm
Dimensions distribution box	L: 59 mm, B: 38 mm, H: 11 mm
IP-class	IP20
Insulation class	Class II
Material	Plastic
Warranty	2 years
Approvals	CE

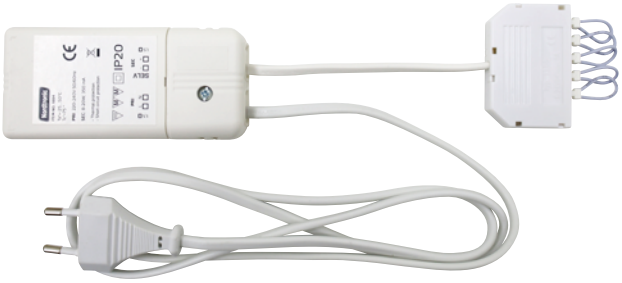

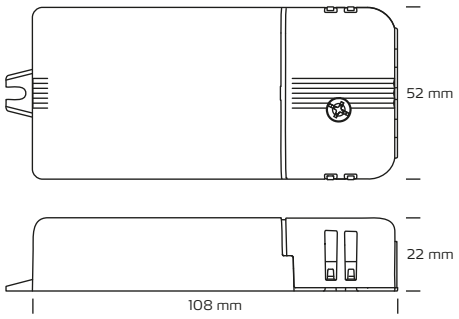

*The drawing is not drawn to scale

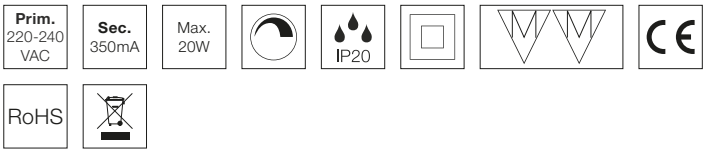

Product information

- LED drivers for mini downlights, 6 outputs
- Built-in thermofuse with auto reset
- Quick and easy installation
- Can be fastened by screws
- Do NOT plug in any LED lamps, when connected to power

Item no.	EAN no.	Colour	Type
1884	5704629018846	White	Dimmable

All rights reserved by Nordtronic A/S I Flade Engvej 4 I DK-9900 Frederikshavn I Denmark I +45 70 20 95 31