Monteringsvejledning/ Monteringsanvisning/ Montasjeanvisning/ Installation instructions/ Installationsanleitung/ Asennusohje

LED Driver - dimmable, 8-20W

Please read the instructions carefully prior to installation and retain them for future reference.

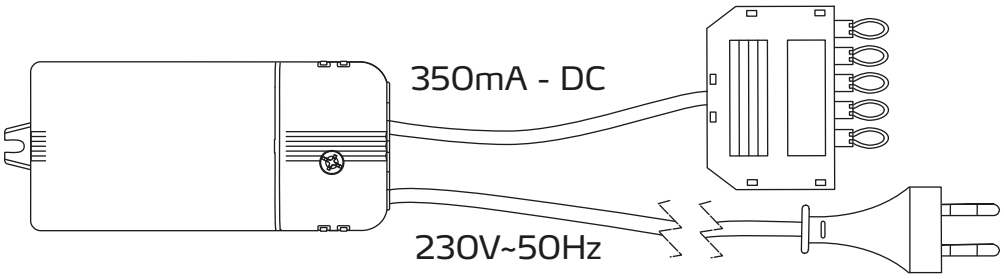

NB: THE CONNECTION TO BE CARRIED OUT ONLY BY QUALIFIED ELECTRICIAN.
MAKE SURE ELECTRICITY SUPPLY IS NOT CONNECTED TO THE APPARATUS.

The power supply unit is an appliance for domestic use.

Item no.	EAN No.	Voltage	Sec.	Type	Color
1884	5704629018846	220-240VAC 50 Hz	350mA 8-20W	Dimmable	White

INSTALLATION & CONNECTION OF LED LAMP

- The LED driver must be placed so it is easily accessible. Do not connect the LED driver on the primary side before all LED lamps are connected.
- Do not connect or disconnect any spots or short-circuits if power is on
- Insert mini plug of LED lamp into an empty outlet
- Max. 20W

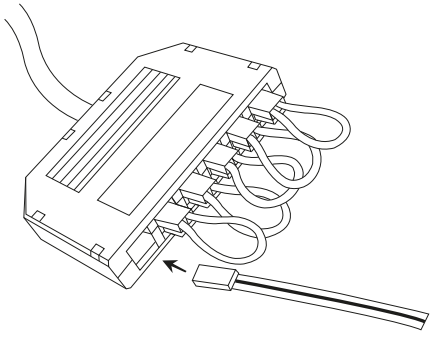

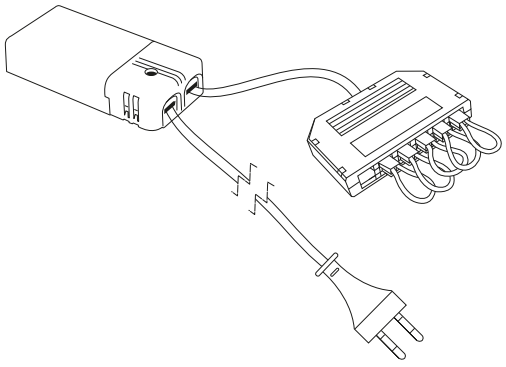

MAINTENANCE

- The power pack is not repairable. In the event of fault or malfunction, replace the whole power pack.
- Cleaning: only use dry cloths for dusting.

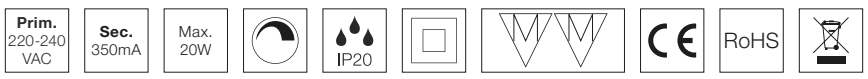

Nordtronic A/S | Flade Engvej 4 | DK - 9900 Frederikshavn | Denmark | CVR: 29808708 | Tel: +45 70209531 | www.nordtronic.com

Find the updated manual on our website - www.nordtronic.com
With reservation for typing errors