Installation Instructions

Instrucciones de instalación, Instructions d'installation, Installationsanleitung, إرشادات التركيب ,
Installatie-instructies, Instruções de instalação, Installatie-instructies,
設置手順説明, **Οδηγίες εγκατάστασης**

Product Code: [ADDIM/1/60/MC]

Master Translations QR Link

IP 20

1

PUSH DIMMING

PARALLEL

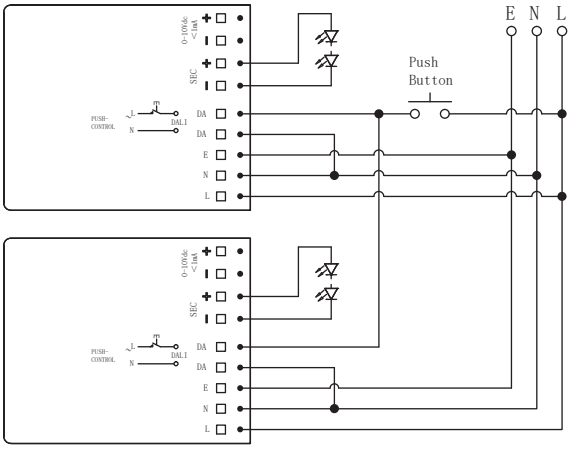

SERIES

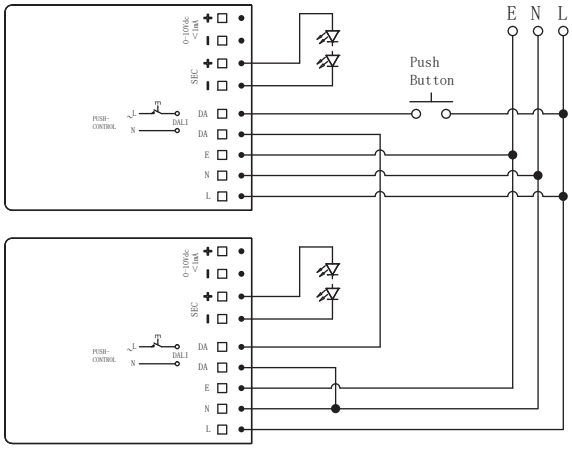

2

DALI DIMMING

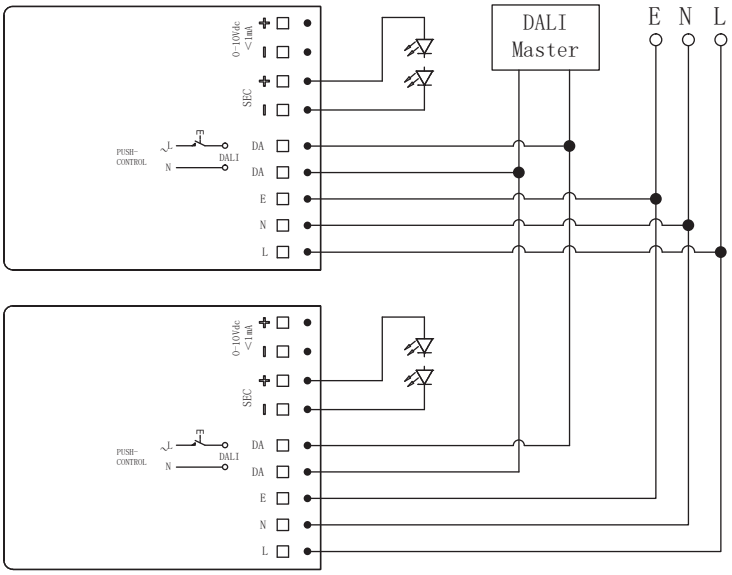

Ansell Electrical Products
Unit 6B, Stonecross Industrial Park,
Yew Tree Way,
Warrington,
WA3 3JD

Ansell (Sales & Distribution)
Unit 2, M2 Business Park,
Duncrue Street,
Belfast,
BT3 9AQ

Ansell (Sales & Distribution) Republic of Ireland Limited
Unit G1, Block G,
Calmount Park, Ballymount
Dublin 12,
D12 TH56

www.ansell-lighting.com

Warrington Tel: +44 (0)1942 433333 Belfast Tel: +44 (0)2890 773750 International Tel: +44 (0)1942 433343 Spain Tel: 00 34 938 005642

3

0-10VDIMMING

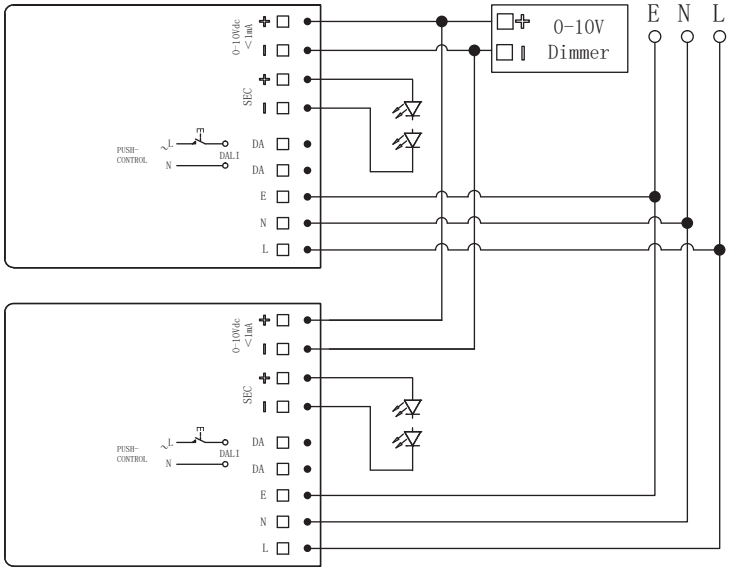

4

SPECIFICATIONS

Code	ADDIM/1/60/MC
Rated Voltage	220-240V AC, 50/60Hz
Rated Current	0.3A Max.
Rated Power	60W Max.
Power Factor	≥ 0.95
Stand-by Power	≤0.5W (@230Vac when DALI turn off)
Control Method	DALI Dimming/PUSH Dimming/0-10VDimming
Output	700mA 9-53Vdc 6.3-37.1W; 1150mA 9-52Vdc 10.3-59.8W; 750mA 9-53Vdc 6.7-39.8W; 1200mA 9-50Vdc 10.8-60.0W; 800mA 9-53Vdc 7.2-42.4W; 1250mA 9-48Vdc 11.2-60.0W; 900mA 9-53Vdc 8.1-47.7W; 1300mA 9-46Vdc 11.7-59.8W; 1000mA 9-53Vdc 9.0-53.0W; 1350mA 9-44Vdc 12.1-59.4W; 1050mA 9-53Vdc 9.4-55.7 W; 1400mA 9-43Vdc 12.6-60.2W; 1100mA 9-53Vdc 9.9-58.3W;
Output Over Temperature Protection	Yes, without self recovery function（Can be inquired）
Output Short Circuit Protection	Yes, without self recovery function（Can be inquired）
Emc Standard	EN55015, EN61547, EN61000-3-2, EN61000-3-3
DALI Protocol Standard	IEC62386-101 / 102 / 207 DT6 / 220 DT19 / 251 / 252 / 253
Safety Standard	EN61347-1, EN61347-2-13
Certification	CE
Operating Temperature	-25℃~45℃, Humidity: 85% (Non-condensing)
Storage Temperature	-40℃~80℃, Humidity: 85% (Non-condensing)
Dimension	160*79*26mm
IP Rating	IP20
Warranty	5 years @Ta full load

ON

Output Current Setting				
mA	1	2	3	4
700	—	—	—	—
750	—	ON	—	—
800	—	—	ON	—
900	—	ON	ON	—
1000	ON	ON	ON	—
1050	—	—	—	ON
1100	ON	—	—	ON
1150	—	ON	—	ON
1200	ON	ON	—	ON
1250	—	—	ON	ON
1300	ON	—	ON	ON
1350	—	ON	ON	ON
1400	ON	ON	ON	ON

Ansell Electrical Products
Unit 6B, Stonecross Industrial Park,
Yew Tree Way,
Warrington,
WA3 3JD

Ansell (Sales & Distribution)
Unit 2, M2 Business Park,
Duncrue Street,
Belfast,
BT3 9AQ

Ansell (Sales & Distribution) Republic of Ireland Limited
Unit G1, Block G,
Calmount Park, Ballymount
Dublin 12,
D12 TH56

www.ansell-lighting.com

Warrington Tel: +44 (0)1942 433333 Belfast Tel: +44 (0)2890 773750 International Tel: +44 (0)1942 433343 Spain Tel: 00 34 938 005642