5 Years
Product Warranty
UK Only

Dimmable Driver

08923 DRC40/D

Dimmable Driver 40W Phase-cut

- Loop-in and loop-out push-wire terminals
- Stand-by power below 0.5W
- Flicker-free for entire dimming range
- Configurable output current with DIP switches

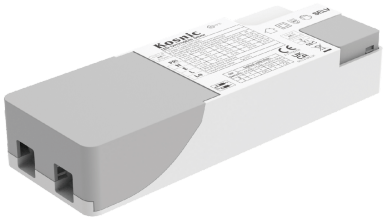

Overview

The Kosnic constant current dimmable LED drivers are suitable for a variety of products with multiple constant current output selections available and can easily be configured with the DIP switches.

Technical Summary	
Product Code	DRC40/D
Driver Maximum Power (W)	40 W
Driver Output Current (mA)	650-950
Driver Power Factor	>=0.9
Weight	0.16Kg

General Information

Installation Area	Internal

Compliance

Others	UKCA, CE, RoHS, WEEE

Tel: 01635 523 713

Email: sales@kosnic.com

Kosnic.com

Kosnic Lighting KosnicUK KosnicLightingUK

5 Years
Product Warranty
UK Only

Dimmable Driver

Kosnic

08923 DRC40/D

Overview

The Kosnic constant current dimmable LED drivers are suitable for a variety of products with multiple constant current output selections available and can easily be configured with the DIP switches.

Current Setting (mA)
650
750
850
950

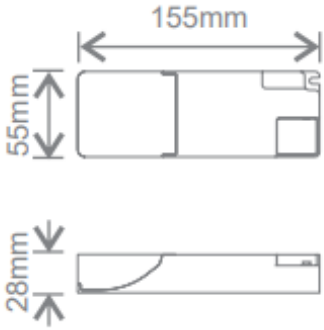

General Information

Installation Area	Internal

Output Current

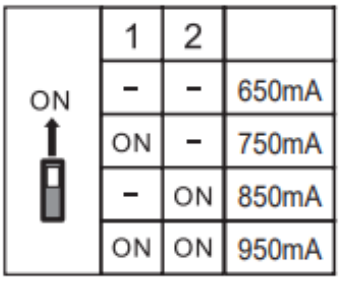

Tel: 01635 523 713
Email: sales@kosnic.com
Kosnic.com
Kosnic Lighting KosnicUK KosnicLightingUK KosnicUK