5 Years
Product Warranty
UK Only

Dimmable Driver

09230 DRC22/D

Dimmable Driver Phase-cut 22W 300-450mA

- Loop-in and loop-out push-wire terminals
- Stand-by power below 0.5W
- Flicker-free for entire dimming range
- Configurable output current with DIP switches

Overview

The Kosnic constant current dimmable LED drivers are suitable for a variety of products with multiple constant current output selections available and can easily be configured with the DIP switches.

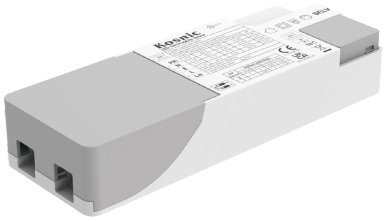

Technical Summary	
Product Code	DRC22/D
Driver Maximum Power (W)	22 W
Driver Output Current (mA)	300-450
Driver Power Factor	≥0.9
Weight	0.123Kg

General Information

Installation Area	Internal

Compliance

Others	UKCA, CE, RoHS, WEEE

Tel: 01635 523 713

Email: sales@kosnic.com

Kosnic.com

Kosnic Lighting KosnicUK KosnicLightingUK

5 Years
Product Warranty
UK Only

Dimmable Driver

09230 DRC22/D

Overview

The Kosnic constant current dimmable LED drivers are suitable for a variety of products with multiple constant current output selections available and can easily be configured with the DIP switches.

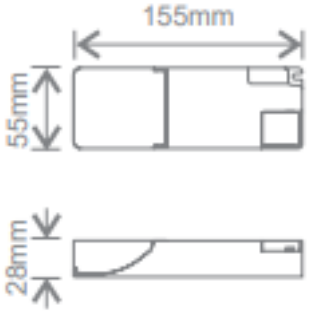

General Information

Installation Area	Internal

Output Current

DRC22/D

	1	2	
ON	–	–	300mA
	ON	–	350mA
	–	ON	400mA
	ON	ON	450mA

Tel: 01635 523 713

Email: sales@kosnic.com

Kosnic.com

Kosnic Lighting KosnicUK KosnicLightingUK KosnicUK