Kosnic

www.kosnic.com

Products Covered:
DRC22/D DRC40/D

Phase-cut Dimmable LED Driver

Please read these instructions thoroughly before use and retain for future reference.

Safety Information

- Installation must be carried out in accordance with national building and wiring regulations. If you are in any doubt about installing this product, please consult a qualified electrician.
- This product is suitable for connection to a 220-240Vac 50/60Hz supply.
- LED drivers with this symbol are class II IP20 independent control gear and do not require further enclosure.
- LED drivers without the symbol will rely on the protection of a suitable enclosure to maintain safety.
- For use only with LED modules requiring a constant current supply.
- Install the LED driver in a well-ventilated position and do not cover in insulating material.
- Do not install the LED diver directly above heat sources, such as the LED module, and ensure the rated ambient temperature is not exceeded.
- Do not cross the input and output wiring as this can cause unwanted induced currents.
- Do not exceed the output wattage of the LED driver.

Output Selection

Before installing, select the appropriate LED driver output current, voltage and maximum wattage from the following options by setting the DIP switches under the cover: This can usually be found by referring to the luminaire markings or the output for the standard driver as listed on the datasheet.

DRC22/D

ON	DIP Switch		Output Current Settings		
	1	2	Output Current	Output Voltage	Max.Load
	–	–	300 mA	27-48 Vdc	14.4W
	ON	–	350 mA	27-48 Vdc	16.8W
	–	ON	400 mA	27-48 Vdc	19.2W
	ON	ON	450 mA	27-48 Vdc	21.6W

DRC40/D

ON	DIP Switch		Output Current Settings		
	1	2	Output Current	Output Voltage	Max.Load
	–	–	650 mA	30-42 Vdc	27.3W
	ON	–	750 mA	30-42 Vdc	31.5W
	–	ON	850 mA	30-42 Vdc	35.7W
	ON	ON	950 mA	30-42 Vdc	40.0W

Dimming

The LED drivers are phase-cut dimming.

Compatibility

The operation of common mains voltage AC dimmers appears similar, but the electrical characteristics vary significantly. While this makes no difference to filament lamps, the effect on the electronics within the LED driver can be dramatic and incompatible. The recommendations given are based on laboratory testing of the volume shown and should be used as guidance. The complicated application environment and huge variation in dimmer construction mean it is not possible to guarantee that a particular dimmer will work perfectly. In extreme cases incompatible dimmer switches may damage the LED drivers. Please ensure that the set-up is tested for performance before committing to a large project.

Recommended Dimmer Switches

Manufacturer	Model	Marked Rating	Notes
Zano	ZGRIDLED	250W LED	1 to 2 lamps. Approximately 90% dimming.
Robus	LOADPRO RLA200DT-01	133W LED	1 to 2 lamps. Approximately 90% dimming.
BG	881P	5-100W	1 to 2 lamps. Approximately 90% dimming.
LAP	H0025/B-SF	5-150W	1 to 2 lamps. Approximately 95% dimming.
LAP	273CC	5-150W	1 to 2 lamps. Approximately 95% dimming.
Knightsbridge	SF2191MW	10-200W (5-150W LED)	1 to 2 lamps. Approximately 95% dimming.
Crabtree	506HV	5-100W	1 to 2 lamps. Approximately 90% dimming.
MK	MB1523WHI	6-100W	1 to 2 lamps. Approximately 90% dimming.
Click	MD9014	100W	1 to 2 lamps. Approximately 90% Dimming.
Selectric	SGRID360-336	5-120W	1 to 2 lamps. Approximately 90% dimming.
Hamilton*	LEDITB	5-100W LED	1 to 2 lamps. Approximately 90% dimming.
Schneider*	GGBL6012	5-100W	1 to 2 lamps. Approximately 90% dimming.
Deta*	SP0081	3-250W LEDs	1 to 2 lamps. Approximately 90% dimming.

*Only compatible with DRC40/D.

Kosnic Lighting Ltd, Unit F, Kennetside, Bone Lane, Newbury, RG14 5PX, UK
Kosnic Lighting France, 2bis Avenue Irene Joliot-Curie, 77700 Bailly-Romainvilliers, France

Kosnic

www.kosnic.com

Installation Instruction / Instructions d'installation / Istruzoni di installazione

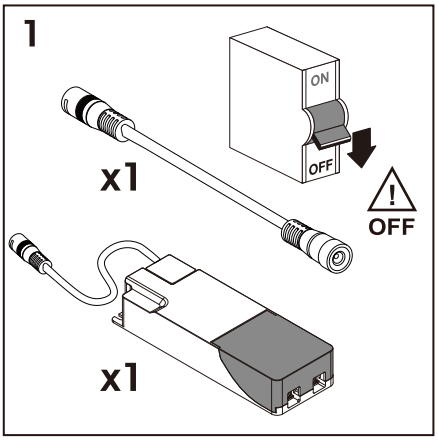

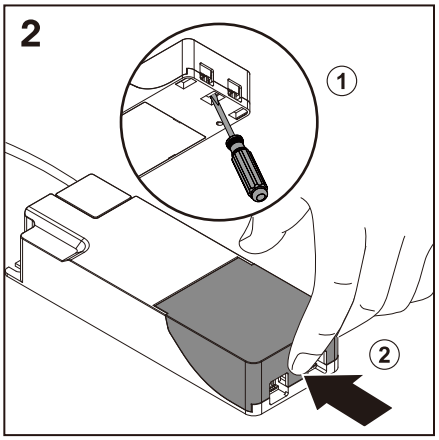

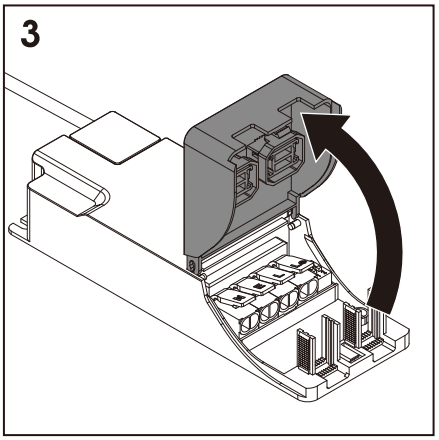

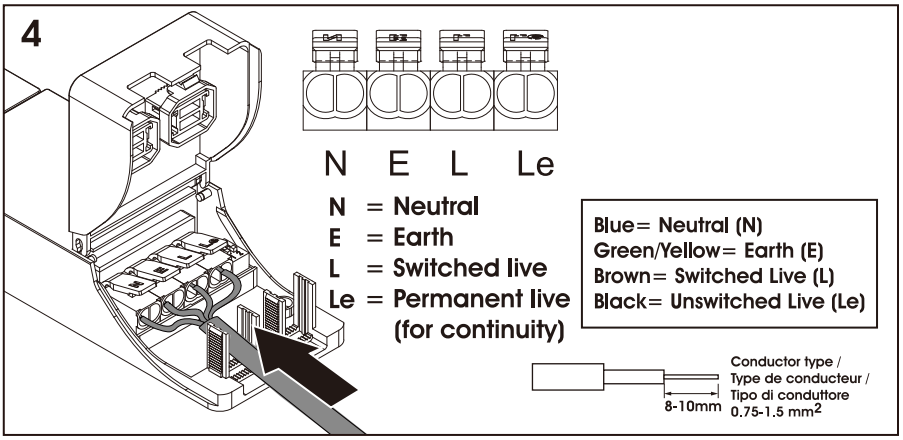

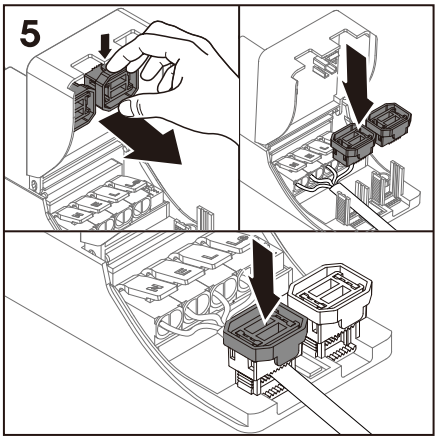

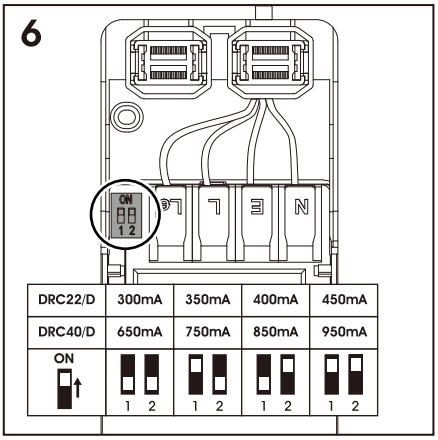

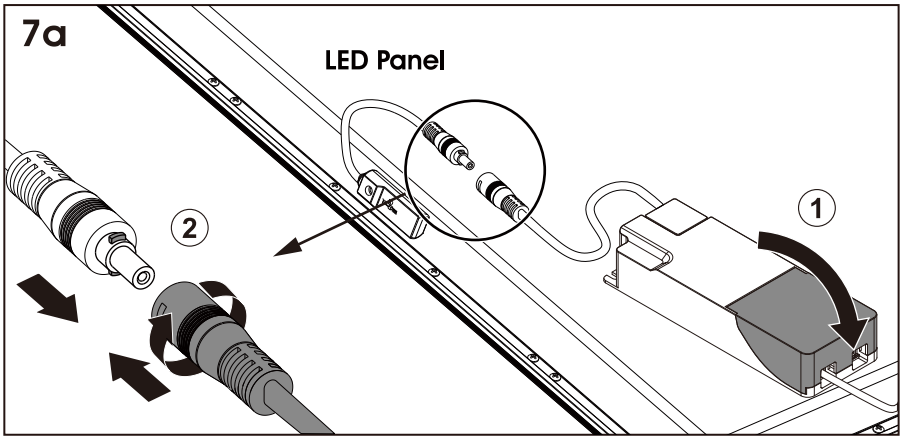

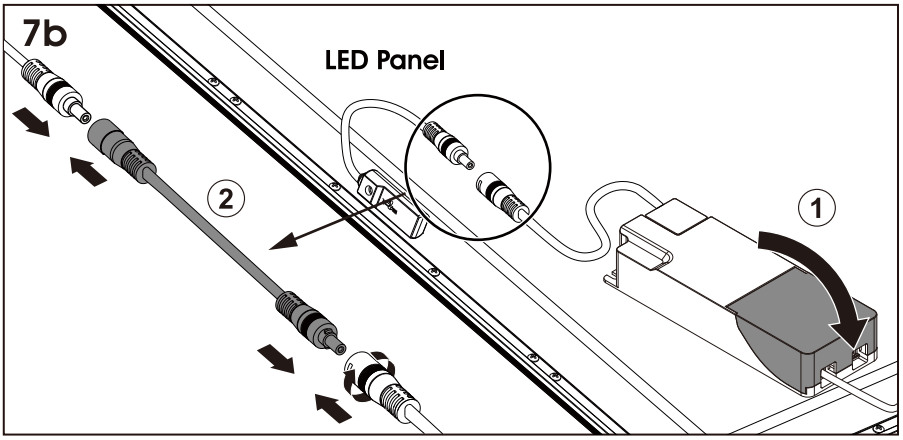

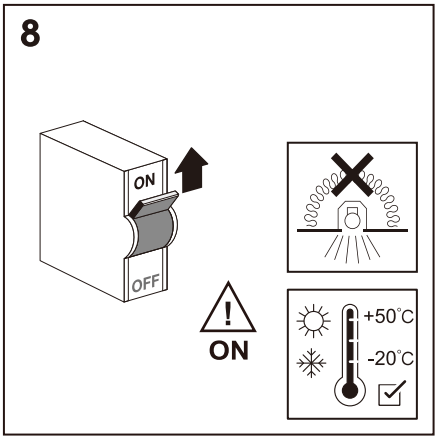

L'élimination du produit et des matériaux d'emballage doit être conforme au décret français No. 2021-835 (France uniquement)

The Waste Electrical & Electronic Equipment Regulations (WEEE) require that products bearing this symbol must not be disposed of with household waste as they may contain substances harmful to the environment. The Local Authority can provide advice on recycling.

Kosnic Lighting Ltd, Unit F, Kennetside, Bone Lane, Newbury, RG14 5PX, UK
Kosnic Lighting France, 2bis Avenue Irene Joliot-Curie, 77700 Bailly-Romainvilliers, France