SPAX assorter case L-BOXX, Electrician set, large

SPAX pan head, T-STAR *plus*

1,200 pan head screws in 14 dimensions, 4 of which are in stainless steel A2 and 10 in WIROX A9J, plus 250 plugs and 6 T-STAR *plus* bits

A2 1.4567 AISI 304 **Stainless steel A2 1.4567** **Class 3**

WIROX A9J **Zinc 10 µm Class 2**

SPAX No.	5000009160319
EAN code	4003530277313
Packaging unit	1 box in master carton

75 / 5.0 x 50 / T 20 ■	100 / 4.0 x 30 / T 20 ■	100 / 4.0 x 35 / T 20 ■	100 / 4.0 x 40 / T 20 ■	100 / 4.0 x 50 / T 20 ■	100 / 6.0 x 30 / Dübel/plug
75 / 5.0 x 60 / T 20 ■	100 / 4.0 x 25 / T 20 ■	100 / 4.0 x 30 / T 20 ■	100 / 4.0 x 35 / T 20 ■	100 / 4.0 x 40 / T 20 ■	
	100 / 4.0 x 50 / T 20 ■		50 / 6.0 x 80 / T 30 ■	6 / T-STAR *plus* Bit	100 / 8.0 x 40 / Dübel/plug
50 / 5.0 x 80 / T 20 ■	50 / 6.0 x 100 / T 30 ■			50 / 10.0 x 50 / Dübel/plug	

■ = T-STAR *plus* full thread

Elektriker-Set
Electrician set

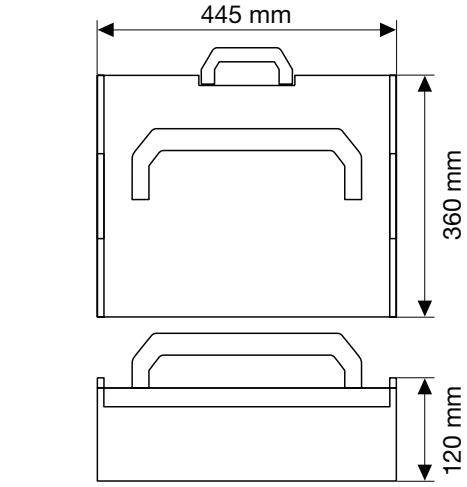





T 20 2 x | T 20 1 x | T 30 2 x | T 30 1 x | 250 x



