Electronic sounder A121

Comax
Signaltechnik



General Information

Universal electronic sounder with 64 different alarm tones. 4 tones can be controlled externally. Volume setting. Audible distance up to 300m.
Automatic synchronisation of several units. Polarized diode for use in supervised circuits. Degree of protection IP66.

Options: UL approval

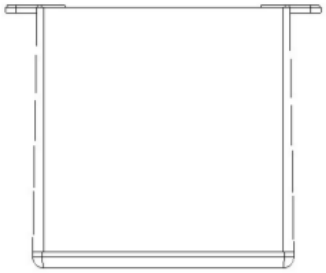

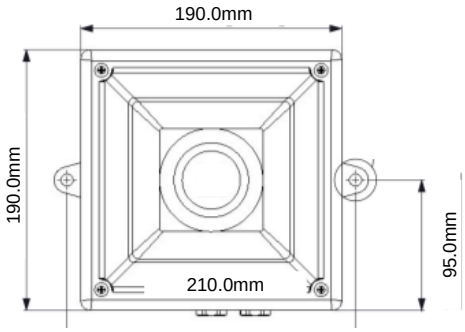

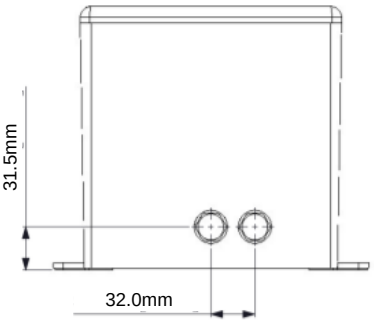

Technical data

Housing	ABS, shock resistant
Housing colour	red (RAL3000)
Degree of protectiont	IP 66 acc. EN60529
Temperature	-40°C to +66°C
Operation	Continuous operation
Tones	Choice of 64 tones (see tone table)
Volume control	-12dB(A) tone dependent
Connection:	
-cable entry	2x M20 (bottom) with stopping plug 1X breakout hole in the bottom
-connection	Terminals 0,5 – 2.5 mm^2
Weight	DC: 2.1kg, AC: 2.7kg
Approval	VdS acc. EN54-3 (nur 24VDC)

Order data

Item number	Rated voltage	Sound intensity level	Current consumption
A121.024.2	11.5-54VDC	ca. 121dB(A),1m	888mA at 24VDC
A121.230.7	100-240VAC	ca. 121dB(A),1m	212mA at 230VAC

Subject to change without prior notice

CE

Comax Signaltechnik

Comax Industrielle Signaltechnik AG, Thalstrasse 279, CH-4712 Laupersdorf/Schweiz
Tel +41-(0)32-617 31 41 E-mail mail@comax.ch Internet www.comax.ch