128, av. du Maréchal-de-Lattre-de-Tassigny - 87045 LIMOGES Cedex
Tél. : 0 (+33) 5 55 06 87 87 - Fax : 0 (+33) 5 55 06 88 88
www.legrand.com

Plexo™
Lighting controls 10 AX

Cat. No(s): 0 695 11L/12L/13L/15L/21L/30L
0 696 11L/12L/13L/20L/27L
0 697 11L/12L/13L/14L/16L/21L/26L/36L/51L/61L
0 698 01L/02L/03L/08L/11L
0 698 12L/27L/51L/52L/81L

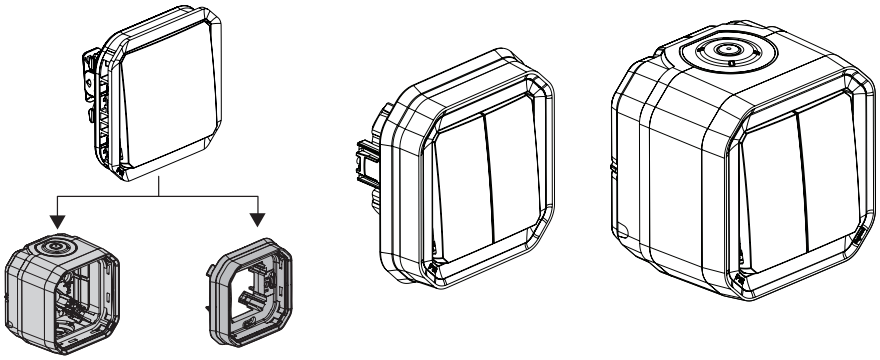

1. USE

Waterproof equipment system intended for residential and professional technical locations (garages, cellars, car parks, workshops and industrial kitchens, etc.) as well as outdoor environments (terraces, gardens, campsites, etc.).
Lighting control mechanisms with or without identification elements (indicators) or signaling elements (markings).
All illuminated and indicator products are delivered with their lamps to bewired.

2. RANGE

		References
Configurable		0 696 11L/12L/13L/20L/27L 0 698 01L/02L/03L/08L/27L
Surface-mounting complete		0 697 11L/12L/13L/14L/16L/21L/26L/36L7/51L/61L
Flush-mounting complete		0 695 11L/12L/13L/15L/21L/30L 0 698 11L/12L/51L/52L/81L

3. OVERALL DIMENSIONS (mm)

■ **Configurable**

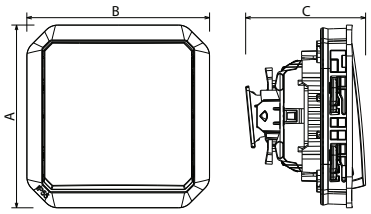

■ **Surface-mounting**

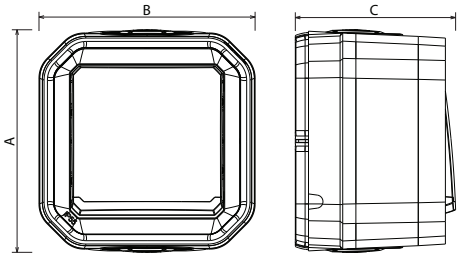

3. OVERALL DIMENSIONS (mm) *(continued)*

■ **Flush-mounting**

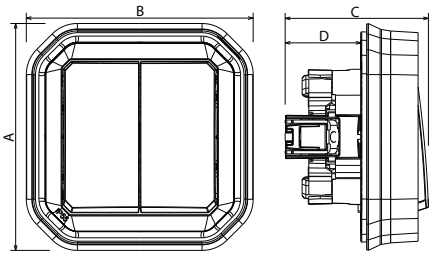

	A	B	C	D
Configurable	70.5	70.5	46.3	-
Surface-mounting	84.5	82	61	-
Flush-mounting	85.1	85.1	53.75	28.4

4. CONNECTION

Type of terminals: automatic
Terminal capacity: 1.5 mm^2 - 2.5 mm^2 (1 or 2 conductors)
Stripping length: 12 mm

5. TECHNICAL CHARACTERISTICS

■ **5.1 Protection index**
Protection against solid bodies and liquids: IP 55
Protection against impact: IK 08

■ **5.2 Material characteristics**
Box, support: PP reinforced
Front plate, rocker: ABS
Entry gland, cover plate: PP + SEBS
Mechanism: PC

UV-resistant
Halogen-free

Resistance to salt spray: 7 days (168 h)

Self-extinguishing:
850°C/30 s for insulating components holding live parts in place.
650°C/30 s for other insulating components.

5. TECHNICAL CHARACTERISTICS *(continued)*

■ 5.3 Electrical characteristics

Voltage: 250 V~
Current: 10 AX
Maximum power on lamps with integrated ballast (LED lamps and compact fluorescent): 100 W
Frequency: 50 Hz

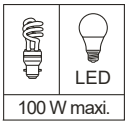

■ 5.4 Climate characteristics

Usage temperature: - 10° à + 40° C
Storage temperature: - 25° C à + 60° C

6. CLEANING

Surface cleaning with a cloth.
Do not use: acetone, tar remover, trichloroethylene.

Maintenance with the following products: Hexane (EN 60669-1), Methylated spirit, Soapy water, Diluted ammonia, Bleach diluted to 10%, Window-cleaning products, Pre-saturated wipes.

Caution: A preliminary test should be carried out if other specific cleaning products are to be used.

7. STANDARDS AND APPROVALS

Compliance with standards of installation and manufacturing.
Refer to e. catalogue.