128, av. du Maréchal-de-Lattre-de-Tassigny - 87045 LIMOGES Cedex
Tél. : 0 (+33) 5 55 06 87 87 - Fax : 0 (+33) 5 55 06 88 88
www.legrand.com

Plexo™
2P+E Schuko socket outlets

Cat. No(s): 0 695 70L/71L
0 696 39L/40L
0 697 00/30L/33L/67L/70L/71L/83L/99L
0 698 33L/34L/39L/59L/68L/69L/71L

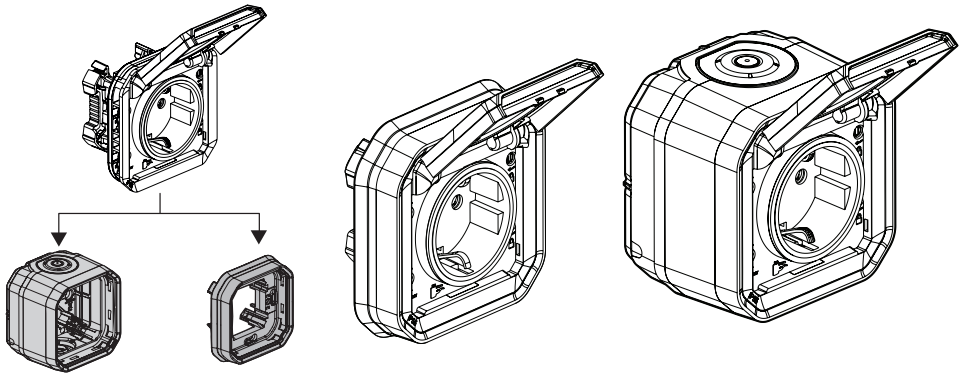

1. USE

Weatherproof wiring accessory system for residential and professional plant rooms (garages, cellars, car parks, industrial workshops and kitchens) as well as outdoor environments (terraces, gardens, camp sites, etc).
Socket outlets with protection eclips.

2. RANGE

		References
Configurable		0 695 70L/71L 0 696 39L/40L 0 697 00L 0 698 39L/71L
Surface-mounting complete		0 697 30L/33L/67L/70L/71L/83L/99L
Flush-mounting complete		0 698 33L/34L/59L/68L/69L

3. OVERALL DIMENSIONS (mm)

■ **Configurable**

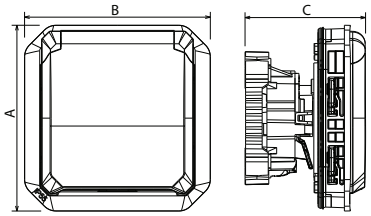

■ **Surface-mounting**

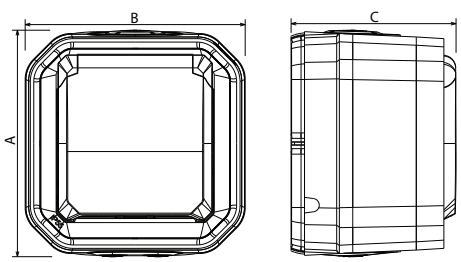

3. OVERALL DIMENSIONS (mm) *(continued)*

■ **Flush-mounting**

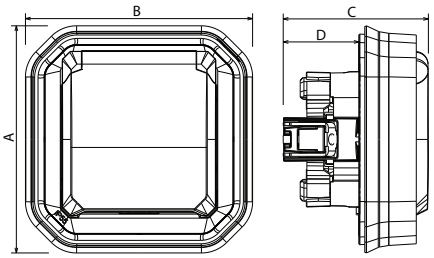

	A	B	C	D
Configurable	70.5	70.5	45.75	-
Surface-mounting	84.5	82	61.55	-
Flush-mounting	85.1	85.1	54.4	28.4

4. CONNECTION

Type of terminals: automatic
Terminal capacity: 1.5 mm^2 - 2.5 mm^2 (1 or 2 conductors)
Stripping length: 12 mm

5. TECHNICAL CHARACTERISTICS

■ **5.1 Protection index**
Protection against solid bodies and liquids:
_ IP 55 with flap closed
_ IP 44 with flap open
Protection against impact: IK 08

■ **5.2 Material characteristics**
Box, support: PP reinforced
Front plate, flap: ABS
Entry gland, cover plate: PP + SEBS
Mechanism: PC

UV-resistant
Halogen-free

Resistance to salt spray: 7 days (168 h)

Self-extinguishing:
850°C/30 s for insulating components holding live parts in place.
650°C/30 s for other insulating components.

5. TECHNICAL CHARACTERISTICS *(continued)*

■ 5.3 Electrical characteristics
Voltage: 250 V~
Current: 16 A
Frequency: 50 Hz

■ 5.4 Climate characteristics
Usage temperature: - 10° à + 40° C
Storage temperature: - 25° C à + 60° C

6. CLEANING

Surface cleaning with a cloth.
Do not use: acetone, tar remover, trichloroethylene.

Maintenance with the following products: Hexane (EN 60669-1), Methylated spirit, Soapy water, Diluted ammonia, Bleach diluted to 10%, Window-cleaning products, Pre-saturated wipes.

Caution: A preliminary test should be carried out if other specific cleaning products are to be used.

7. STANDARDS AND APPROVALS

Compliance with standards of installation and manufacturing.
Refer to e. catalogue.