Energy Division

Tyco Electronics

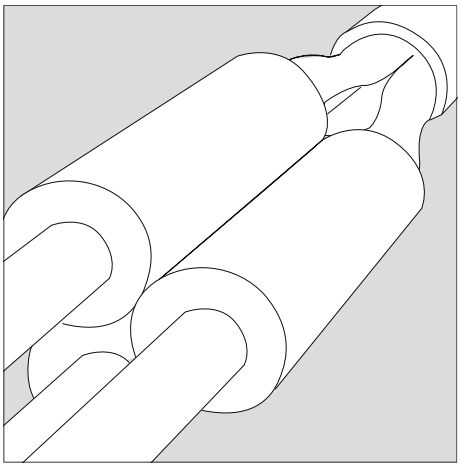

Installation Instruction EPP-0289-1/01

Joints for Transitions from Screened 3-Core Plastic Insulated Cables without Armour to Screened or Belted 3-Core Paper Insulated Cable 12 kV to 24 kV

3XU - 3SB

Tyco Electronics Raychem GmbH
Energy Division
Finsinger Feld 1
85521 Ottobrunn/Germany
0049-89-6089-0 tel
0049-89-6096-345 fax
http://energy.tycoelectronics.com

Before Starting

Check to ensure that the kit you are going to use fits the cable.

Refer to the kit label and the title of the installation instruction.

Components or working steps may have been improved since you last installed this product.

Carefully read and follow the steps in the installation instruction.

General Instructions

Use a propane (preferred) or butane gas torch.

Ensure the torch is always used in a well-ventilated environment.

Adjust the torch to obtain a soft blue flame with a yellow tip.

Pencil-like blue flames should be avoided.

Keep the torch aimed in the shrink direction to preheat the material.

Keep the flame moving continuously to avoid scorching the material.

Clean and degrease all parts that will come into contact with adhesive.

If a solvent is used follow the manufacturer's handling instructions.

Tubing should be cut smoothly with a sharp knife leaving no jagged edges.

Start shrinking the tubing at the position recommended in the instruction.

Ensure that the tubing is shrunk smoothly all around before continuing along the cable.

Tubing should be smooth and wrinkle free with inner components clearly defined.

The Information contained in these installation instructions is for use only by installers trained to make electrical power installations and is intended to describe the correct method of installation for this product. However, Tyco Electronics has no control over the field conditions which influence product installation. It is the user's responsibility to determine the suitability of the installation method in the user's field conditions. Tyco Electronics' only obligations are those in Tyco Electronics' standard Conditions of Sale for this product and in no case will Tyco Electronics be liable for any other incidental, indirect or consequential damages arising from the use or misuse of the products.
Raychem, TE Logo and Tyco Electronics are trademarks.

Overlap of Cables

Overlap the cables to be jointed by about 150 mm.

Slide the two outer sleeves over one cable end.
Mark the reference-line (the middle of the overlap).

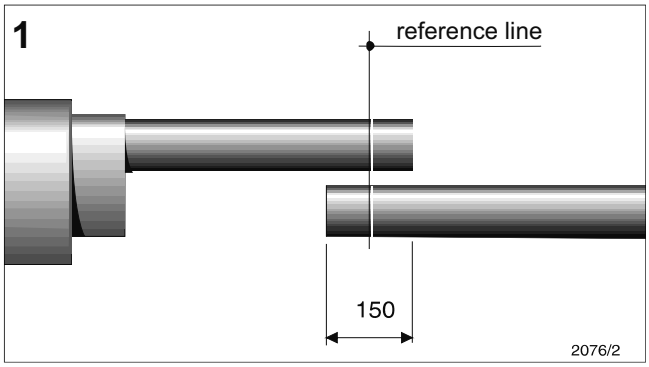

Paper Cable Preparation

Remove the oversheath, armour and bedding according to dimension in table 1.
Abrade, clean and degrease the metal sheath and the armour.

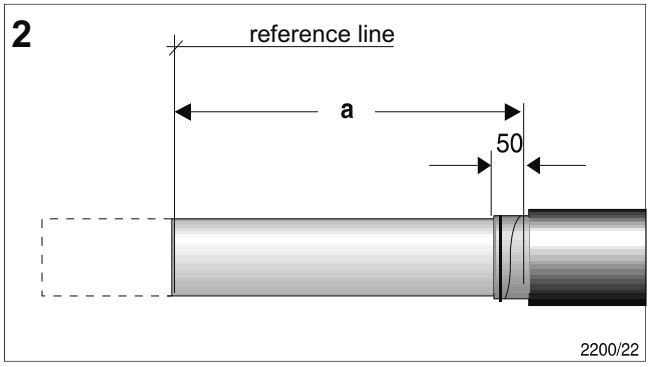

Table 1

Kit Size	Cross Section mm² 12 kV	17.5 kV	a [mm]
A	35 - 70	25 - 50	650
B	95 - 185	70 - 150	650
C	240 - 400	185 - 300	700
D	500 - 630	400 - 500	700

Kit Size	Cross Section mm² 24 kV	a [mm]
A	- 25	650
B	35 - 70	650
C	95 - 240	680
D	300 - 400	700

Remove the metal sheath according to the dimensions in drawing 3, in such a way that a slight bell is formed.

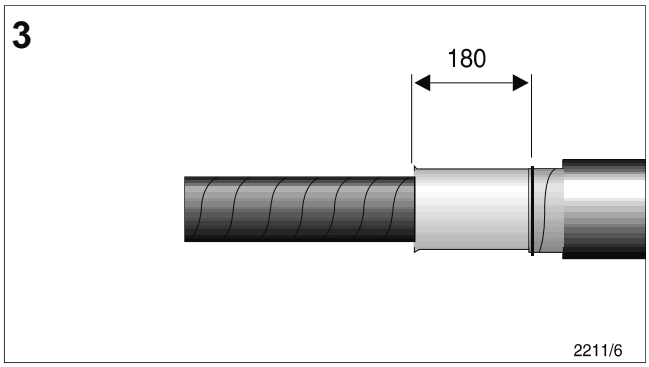

Tear off the carbon papers at the end of the metal sheath.
Tie a twine binder round the belt papers or fabric tape 20 mm from the end of the metal sheath.
Tear off the belt papers or fabric tape level with the twine binder.
Remove the fillers level with the twine binder.
Take care not to damage the belt papers when positioning the cores.

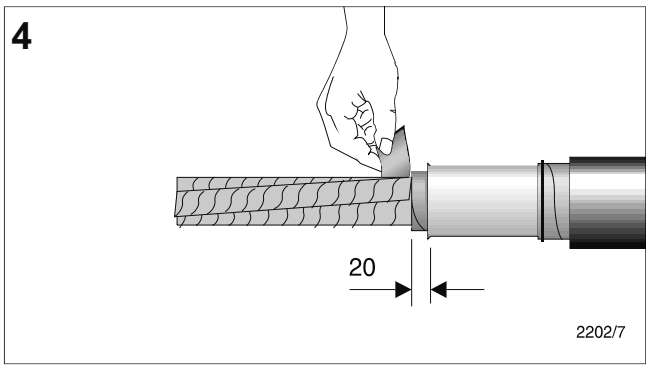

Protect the belt papers or fabric tape with nylon tape.
Start taping 20 mm onto the metal sheath applying the tape with slight tension.

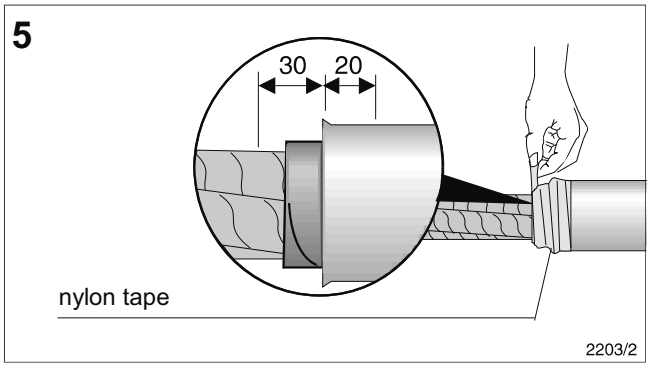

Screened Cable only
Remove the screened papers to the dimensions given in drawing.

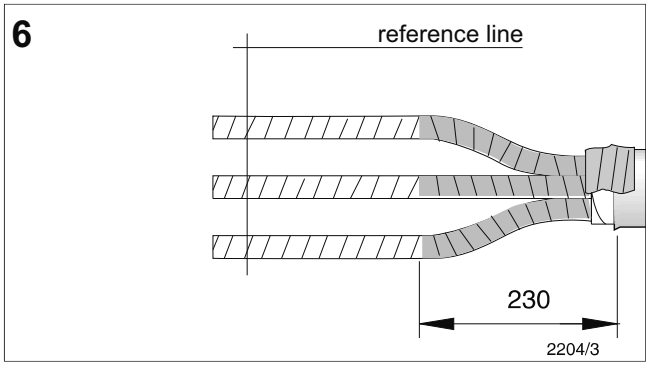

Remove two of the top paper layers up to the screen cut.

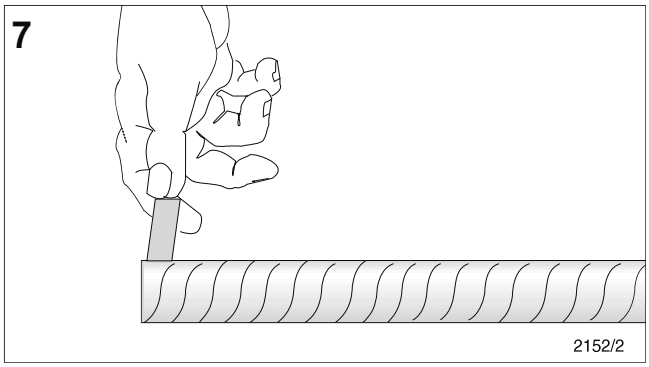

Separate the cores carefully so as not to damage the belt or core insulation papers.
Shape and position the cores.
Slide the barrier tubing (transparent) over the cores and position it 30 mm from the end of the metal sheath.
Shrink down the barrier tubing starting at the crutch side and working towards the cable end. Ensure that the tubing is shrunk down evenly and is free from air and grease pockets.

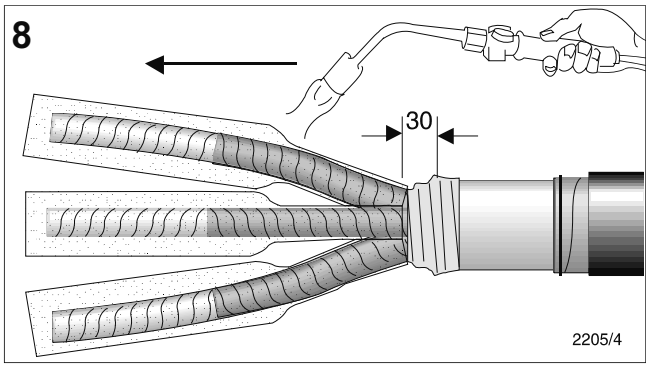

Slide the conductive tubing (black) over the cores and position it 50 mm from the end of the metal sheath.
Shrink down the conductive tubing starting at the crutch side and working towards the cable end.

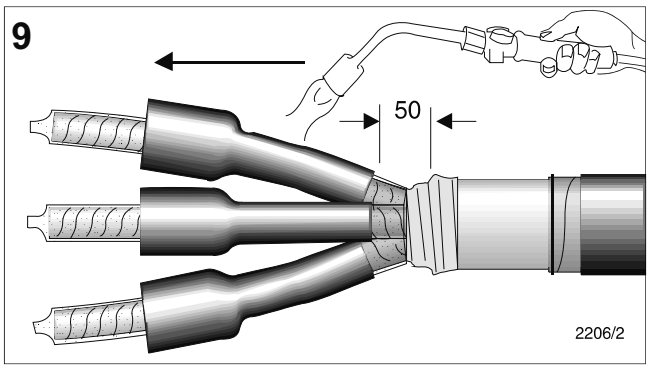

Remove the packaging of the small wedge (**1**) first (see detailed drawing) and insert it well into the crutch area by using the installation tool provided.

Take the large wedge (**2**) out of the cartridge and insert it behind the previously installed smaller wedge.

Clean and degrease the cores.

Remove the nylon tape after inserting the wedges.

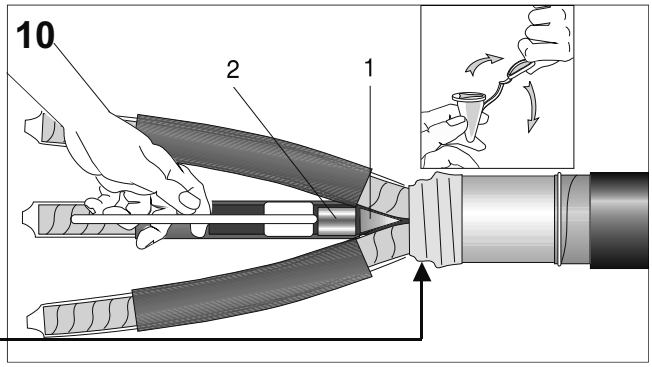

Remove one release paper from the yellow void filling tape and roll up the tape. Applying the void filling tape with a 50% overlap and stretching it to about half of its original width, tape up the outside of the crutch as shown. Cover 20 mm of the oversheath and continue for 70 mm onto the cover tubing.

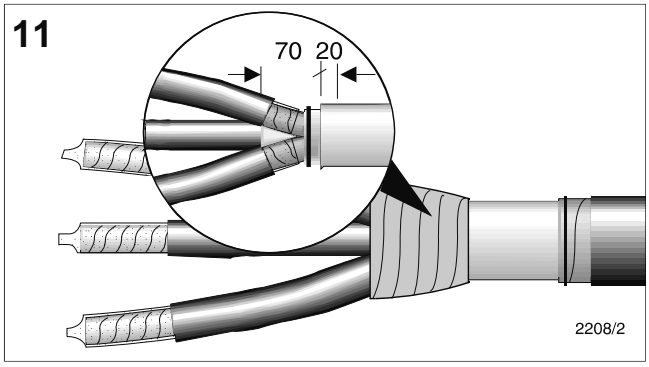

Pass the conductive breakout over the cores and pull it well down into the crutch. Shrink the conductive breakout into place starting at the centre. Work first towards the metal sheath, then shrink the turrets onto the cores. The numbers in the drawing indicate the shrink-sequence.Cut the cores at the reference-line.

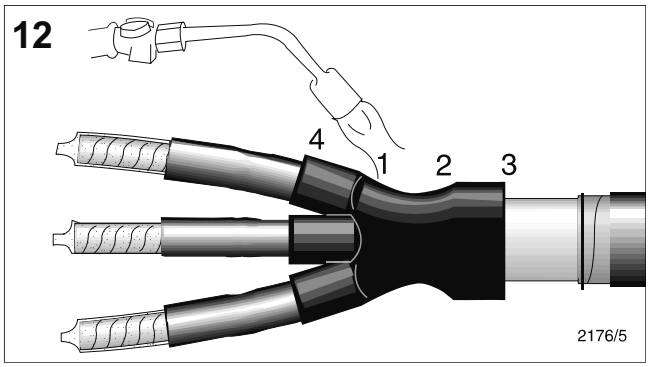

3-Core Plastic Cable Preparation

A. Cables with wire shields
Remove the oversheath to the dimension **b** given in **Table 2**.
Fold the shielding wires back over the cable oversheath and fix them temporarely in place with adhesive tape.
Shape and position the cores of both cables as shown in drawing and then cut them at the reference-line.

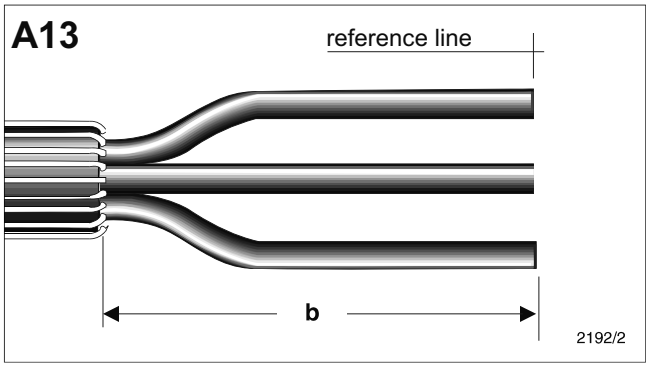

Completely remove the core screen to dimension **c** as given in table 2.
The insulation surface must be free from all traces of conductive material. Clean and degrease the insulation.**Note:** Do not nick the insulation!

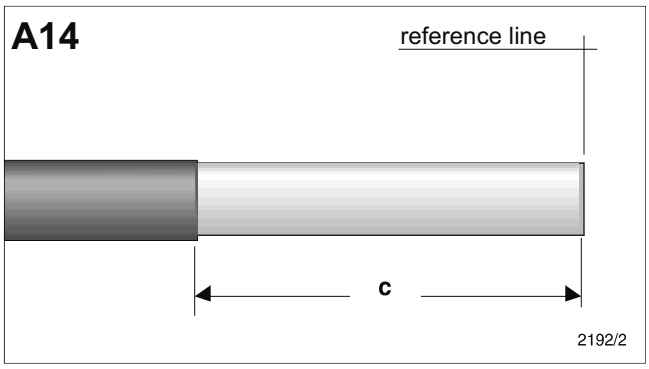

Table 2

Kit Size	Cross Section mm²		b	c	d
	12 kV	17.5 kV	[mm]	[mm]	[mm]
A	35 - 70	25 - 50	650	120	140
B	95 - 185	70 - 150	700	140	160
C	240 - 400	185 - 300	800	160	180
D	500 - 630	400 - 500	850	180	200

Kit Size	Cross Section mm²	b	c	d
24 kV	[mm]	[mm]	[mm]	[mm]
A	- 25	800	140	160
B	35 - 70	800	160	180
C	95 - 240	850	170	190
D	300 - 400	900	180	200

B. Cables with metal tape shield
Remove the oversheath to the dimension **b** given in **Table 2**.Shape and position the cores as shown in drawing below.
Cut the cores at the reference line.
Position a temporary wire binder on the metal tape shield according to dimension **d** as given in table 2**.**
Remove the metal tape shield by tearing it against the wire binder.

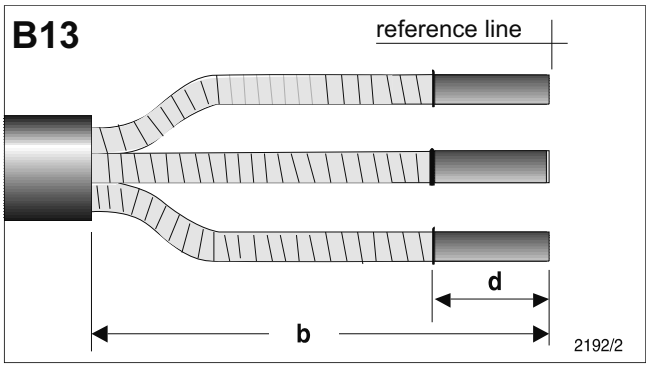

Completely remove the core screen to within 20 mm of the metal tape shield as shown in drawing**.** The insulation surface must be free from all traces of conductive material.
Clean and degrease the insulation.
Note: Do not nick the insulation.

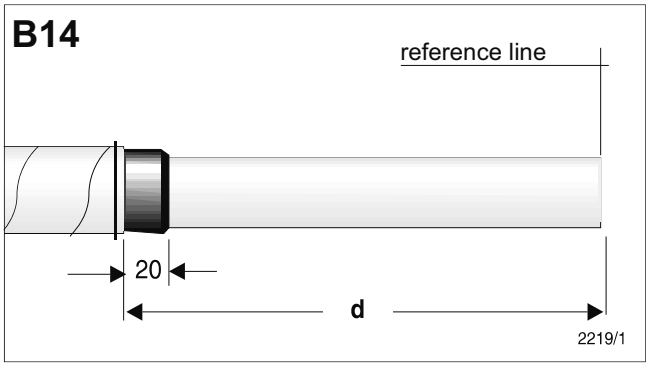

Completion of joint

Slide a combined tubing set over each plastic cable core.

1 - Stress control tubing (black)
2 - Screened insulation sleeve (black and red)
3 - Compression sleeve (black)

Note: Take care that the uncoated end of the compression sleeve points towards the plastic cable oversheath.

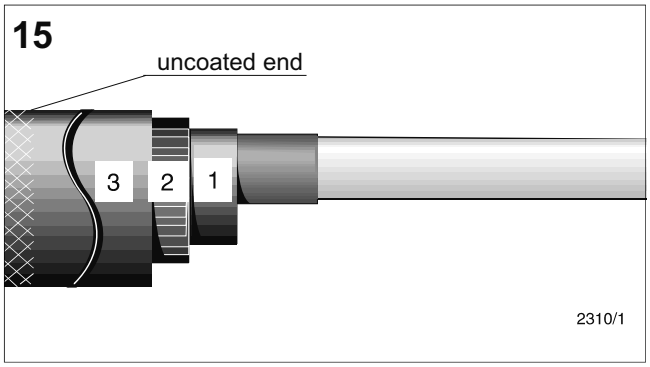

Table 3

Maximum dimensions of connectors before installation
Use oil-blocked connectors only!

Kit Size	Cross Section mm²		Connector diameter	length
	12 kV	17.5 kV	[mm]	[mm]
A	35 - 70	25 - 50	22	110
B	95 - 185	70 - 150	29	140
C	240 - 400	185 - 300	42	190
D	500 - 630	400 - 500	52	200

Kit Size	Cross Section mm²	Connector diameter	length
	24 kV	[mm]	[mm]
A	25	20	110
B	35 - 70	25	140
C	95 - 240	36	160
D	300 - 400	44	200

Remove the insulation on all cores to dimension l **= depth of connector hole + 5 mm.**
Joint the conductors by crimping, soldering or any other equivalent method. Remove any sharp edges. Clean and degrease the insulation.

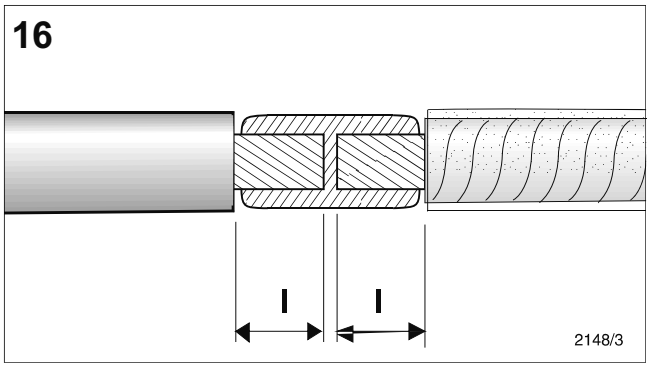

Plastic Cable
Remove the release papers from the yellow void filling strip with the pointed ends, Stretch the strip to half of its original width to achieve a fine thin edge.

A.Wire Shield
Wrap the void filler around the core screen starting 20 mm from the end of the screen and continue onto the insulation for 10 mm.

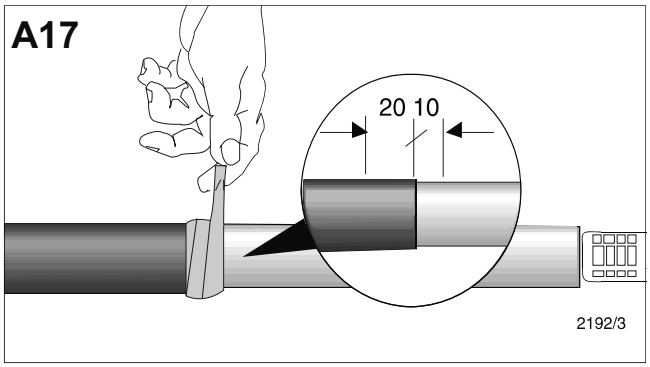

B.Tape Shield

Remove the wire binder from the end of the metal tape shield.
Wrap the void filler for 5 mm onto the metal tape shield, continuing over the core screen and 10 mm onto the insulation.

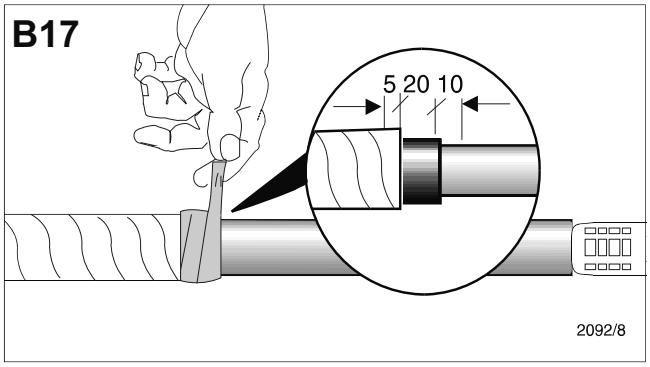

Paper Cable
Wrap one layer of (yellow) void filling strip around the end of each conductive tubing (black).
Start 20 mm onto the conductive tubing and continue for 10 mm onto the barrier tubing (transparent).
Stretch the (yellow) void filling strip to half its original width to achieve a fine thin edge onto the barrier tubing.

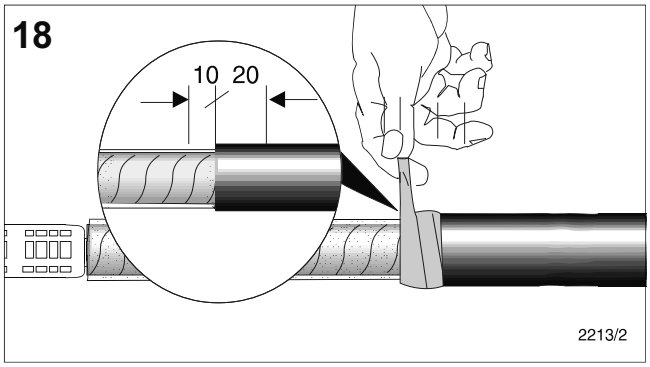

Remove the printed release paper from the (yellow) void filling tape.
Apply the tape with a 50% overlap stretching it to about half of its original width.
Fill up the connector area continuing onto the insulation for not more than 5 mm.
Note: Do not use too much void filler. The final diameter should be only slightly greater than the core or connector diameter, whichever is larger.

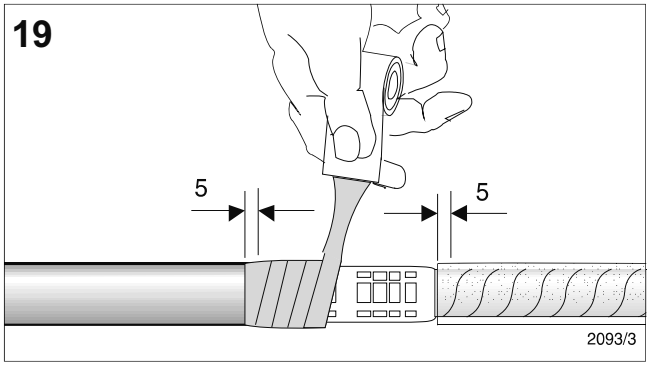

Position the stress control tubing centrally over the joint.
Shrink down the stress control tubing starting in the centre and working towards the ends.
The tubing should be fully shrunk and wrinkle free.

Note: Take care not to accidentally shrink the other tubing at this stage.

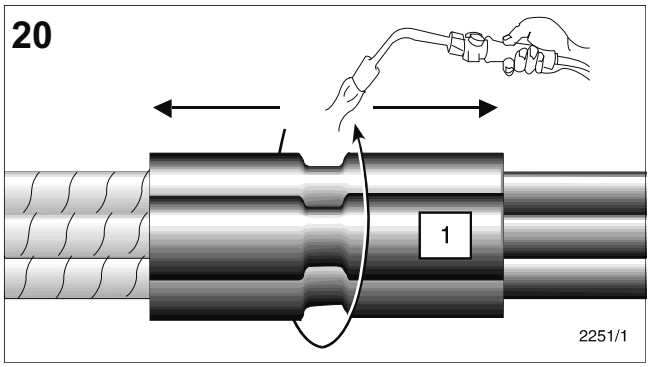

Position all three screened insulating sleeves (black and red) centrally over the previously installed tubing.
a. Start shrinking the sleeves in the centre (1).
b. Check if fully shrunk by twisting the end.
The sleeves should not move from its position.
c. Continue shrinking by working towards one side (2), stopping 50 mm from the end.
Shrink the other half in the same way (3).
d. Shrink down the first end (4) and finally the second (5)
The sleeves should be fully shrunk without leaving ridges.

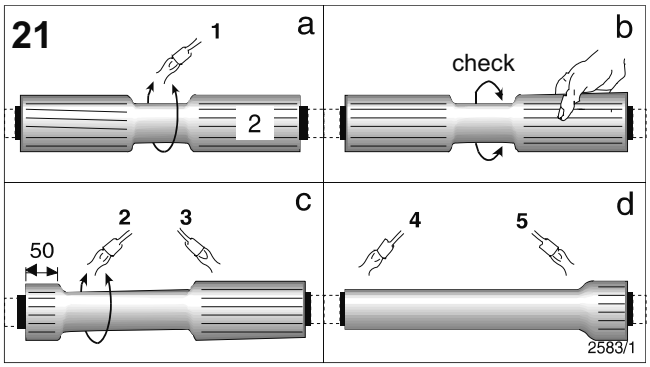

Position the compression sleeves so that they equally overlap the fingers of the breakout and the insulating sleeve.
Start shrinking on the cores working towards the crutch area.
Allow to cool for 15 minutes.

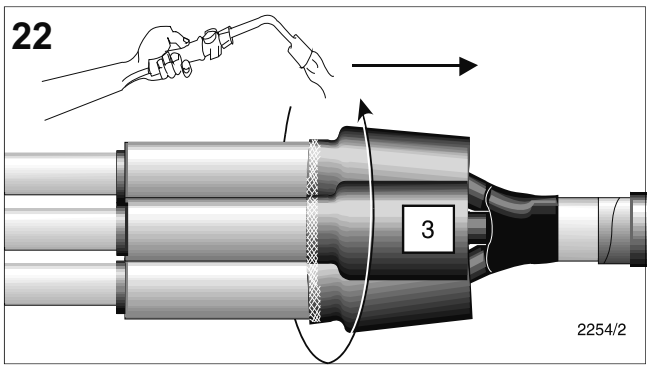

Relay the cores as far as possible.
Wrap one layer of copper braid round the cores with a 50% overlap. Cover 30 mm of the metal sheath of the paper cable. Continue across the joint onto the shield of the plastic cable.

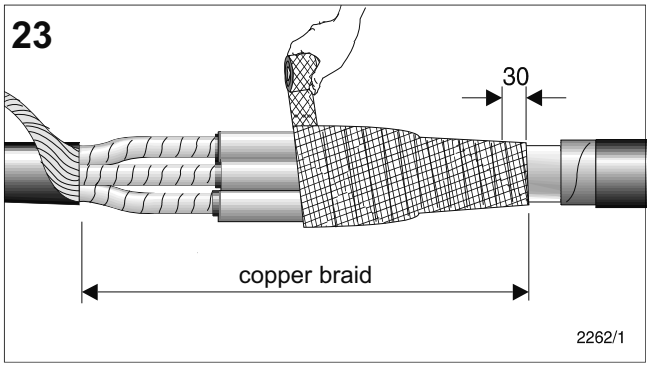

Paper Cable with Armour
Wrap one layer of sealant tape (black) around the metal sheath close to the end of the armour. Position the earth lead over the degreased and cleaned tape armour (as shown) so that the moisture block is centred over the sealant tape (black).
Wrap the roll spring over the earth lead and armour then twist tightly.
Cover the sharp edges of the roll spring with insulating tape.

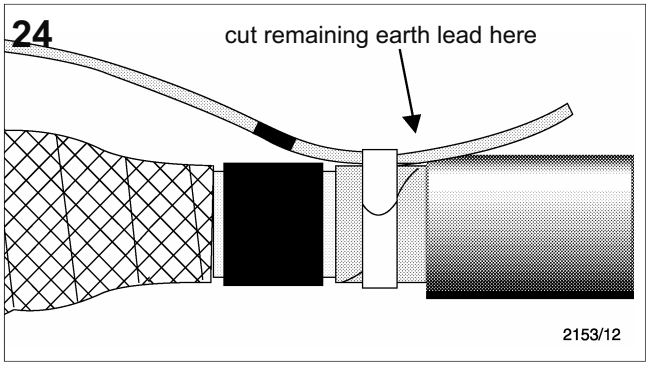

Place the remaining earth lead over the copper braid wrap.Wrap the roll spring twice over the earth lead in the direction of the copper braid wrap.
Fold the end of the earth lead back over the roll spring.
Wrap the roll spring over the earth lead. Fold the end of the earth lead back to the copper braid. Wrap the rest of the roll spring over the earth lead. Tighten the roll spring with a twisting action.
Cover the sharp edges of the roll spring with insulating tape.

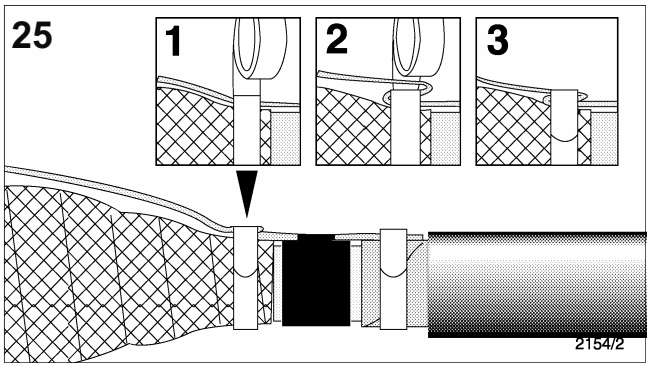

Wrap a second layer of sealant tape (black) over the first layer so that it covers the earth lead.

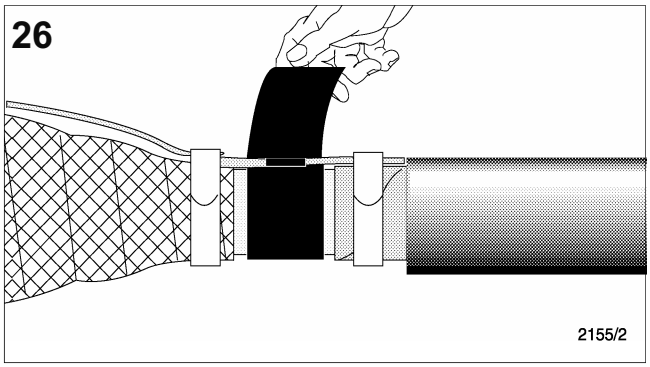

Cable with wire shield
Connect the earth lead to the shield wires by crimping or any other equivalent method.

Cable with tape shield
Spread the earth lead and connect it to the tape shield of each core by soldering or any other equivalent method.

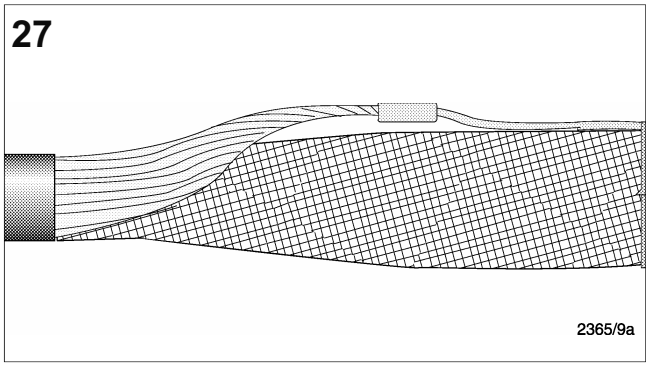

Remove the release paper from the inside of the small outer sealing sleeve. Position the sealing sleeve so that it overlaps the end of the paper cable oversheath by about 100 mm. Start shrinking at the oversheath end, working towards the connector area.

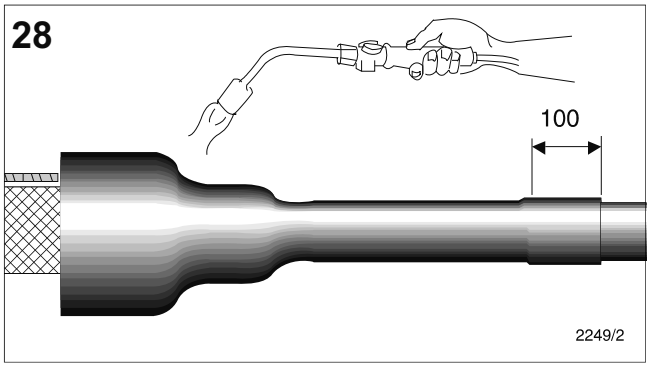

Starting 20 mm from the inner end of the outer sealing sleeve, wrap one layer of sealant tape around the sleeve.

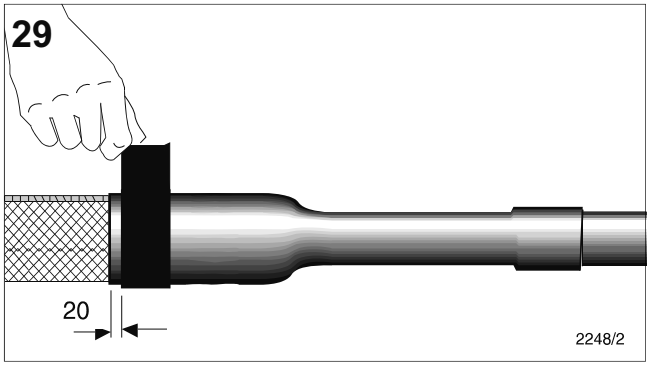

Remove the release paper from the second outer sleeve and position it so that it overlaps the end of the oversheath by about 100 mm min. Start shrinking at the oversheath, working towards the centre of the joint.

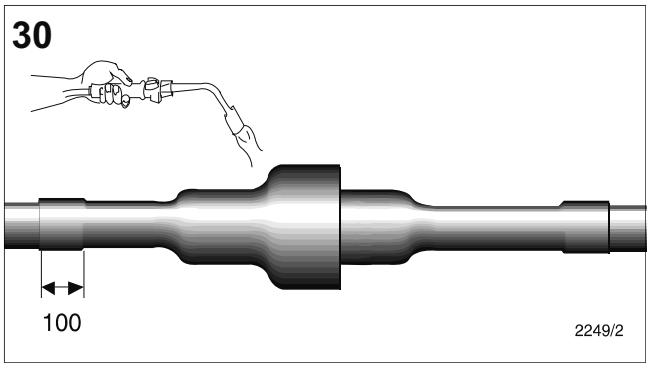

Joint completed.
Allow the joint to cool before applying any mechanical strain.

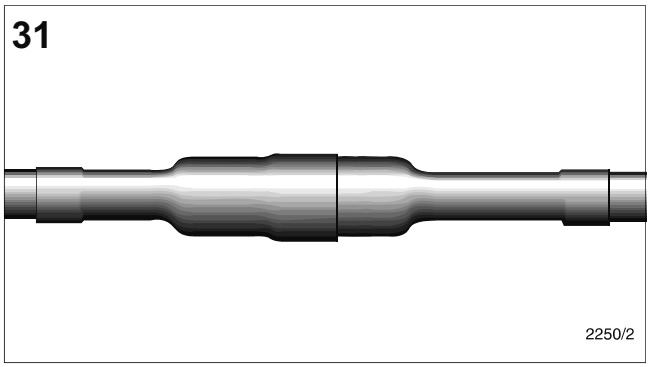

Please dispose of all waste according to environmental regulations.

