

Sensor technology PSEN®, control and signal devices PIT®

PILZ
THE SPIRIT OF SAFETY

- Devices for position monitoring
- Safety switches
- Safety gate systems
- Light curtains
- Safety laser scanners
- Safe camera systems
- Control and signal devices








The safe solution:
Sensor and control technology.

Safe sensor technology PSEN®, control and signal devices PIT®

Pilz sensors PSEN and control and signal devices PIT guarantee that machinery and complex plants can be used efficiently while still complying with standards intended to protect human and machine. The versatile portfolio provides individual solutions for every requirement: from monitoring of positions, covers and safety gates to area monitoring. When combined with safe control technology from Pilz, you get a cost-effective, all-in-one solution.

Contents

Pilz automation solutions 6

Sensor technology 8

Safety Device Diagnostics
- Safety Device Diagnostics SDD 14

Devices for position monitoring
- Safe rope-pull switch PSENrope 16
- Rotary encoder PSENenco 18

Safety switches 20
- Mechanical safety switch PSENmech 22
- Magnetic safety switch PSENmag 26
- Coded safety switch PSENcode 34
- Safety bolt PSENbolt 44
- Safe hinge switch PSENhinge 46

Safety gate systems 48
- Modular safety gate system 48
- Safety gate system PSENslock 50
- Safety gate system PSENmlock 56
- Safety gate system PSENsgate 62

Optoelectronic sensors
- Light curtains 68
  - Light curtains PSENopt II – new generation 72
  - Light curtains PSENopt Advanced 74
  - Light curtains PSENopt slim 76
- Safety laser scanner PSENscan 94

Safe camera systems
- Camera-based protection systems PSENvip 98
  - Camera-based protection system PSENvip 100
  - Camera-based protection system PSENvip 2 102

Collision measurement set for human-robot collaboration (HRC)
- Collision measurement set PRMS 108

Control and signal devices 112
- E-STOP pushbuttons PITestop and PITestop active 114
- Pushbutton unit PITgatebox 126
- Operating mode selection and access permission system PITmode 130
- Manually operated control device PITjog 134
- Enabling switch PITenable 136

Decentralized modules IP67
- Decentralized modules PDP67 140

Cable accessories for sensor technology 138

Index 168



Pilz is your solution supplier for all automation tasks. Including standard control functions. Pilz developments protect man, machine and the environment.

Pilz has a tradition as a family-run company stretching back over 70 years. Real proximity to customers is visible in all areas, instilling confidence through individual consultation, total flexibility and reliable service. Worldwide, round the clock, in 42 subsidiaries and branches, as well as 27 sales partners on every continent.

More than 2400 staff, each one of them an ambassador for safety, make sure that your staff – your company's most valuable asset – can work safely and free from injury.









Automation solutions from Pilz – at home in every industry.

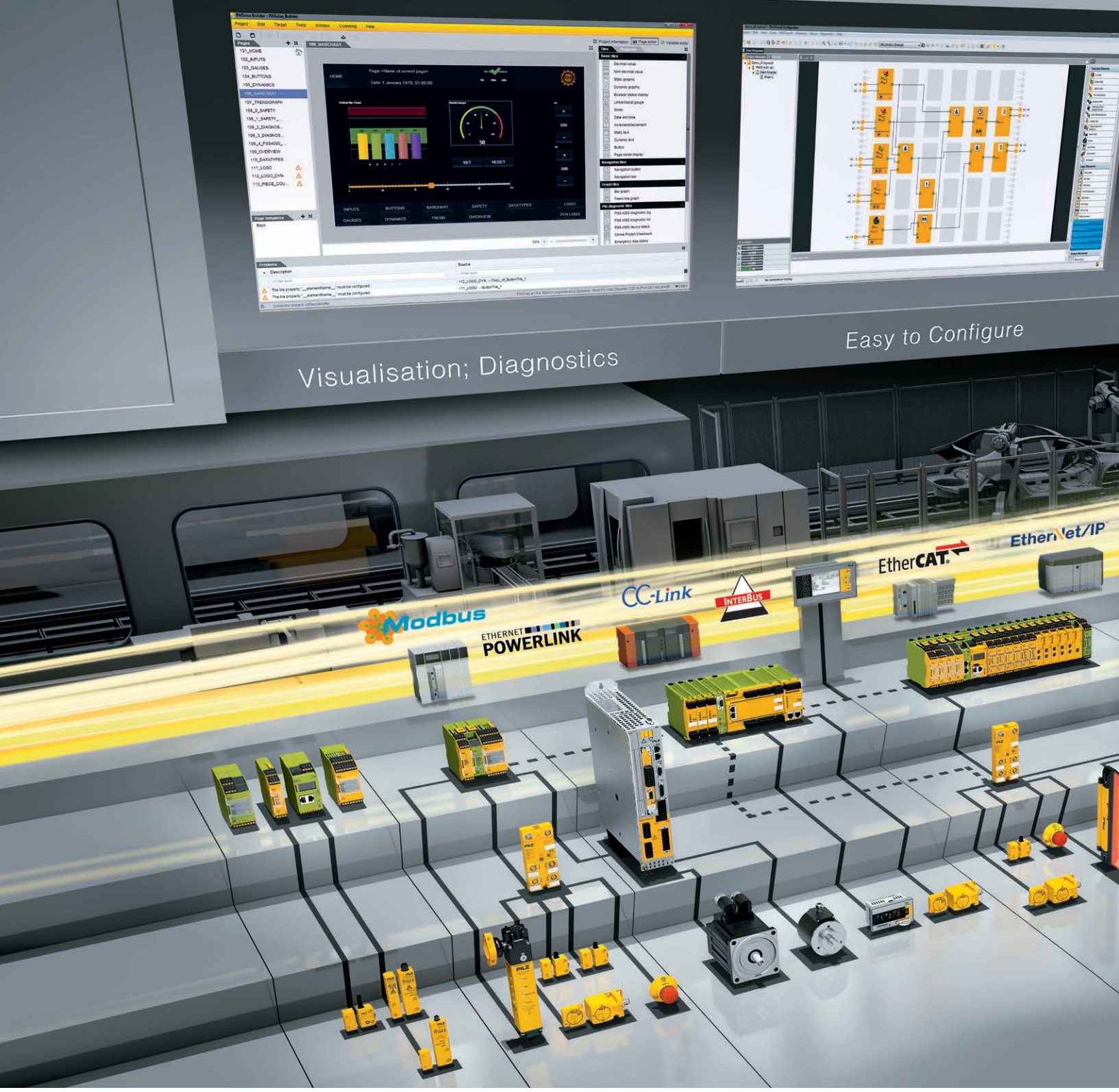

Pilz automation solutions
Pilz offers everything that you need for the automation of your plant and machinery: Innovative components and systems in which safety and automation are merged within hardware and software.

From sensor and control technology to drive technology, the ease of commissioning, operation and diagnostics plays an important role for all components and systems from Pilz.

You benefit from flexible solutions for machines with an elementary function range through to large interlinked plants. With us you can standardize your safety, implement safety and automation in one periphery or find solutions for complete automation.

Pilz solutions are embedded into the relevant system environment – whether a new structure or a retrofit – and are open for a variety of interfaces and functionalities.

The perfect combination:

Control technology from Pilz offers numerous application options, including monitoring of electrical

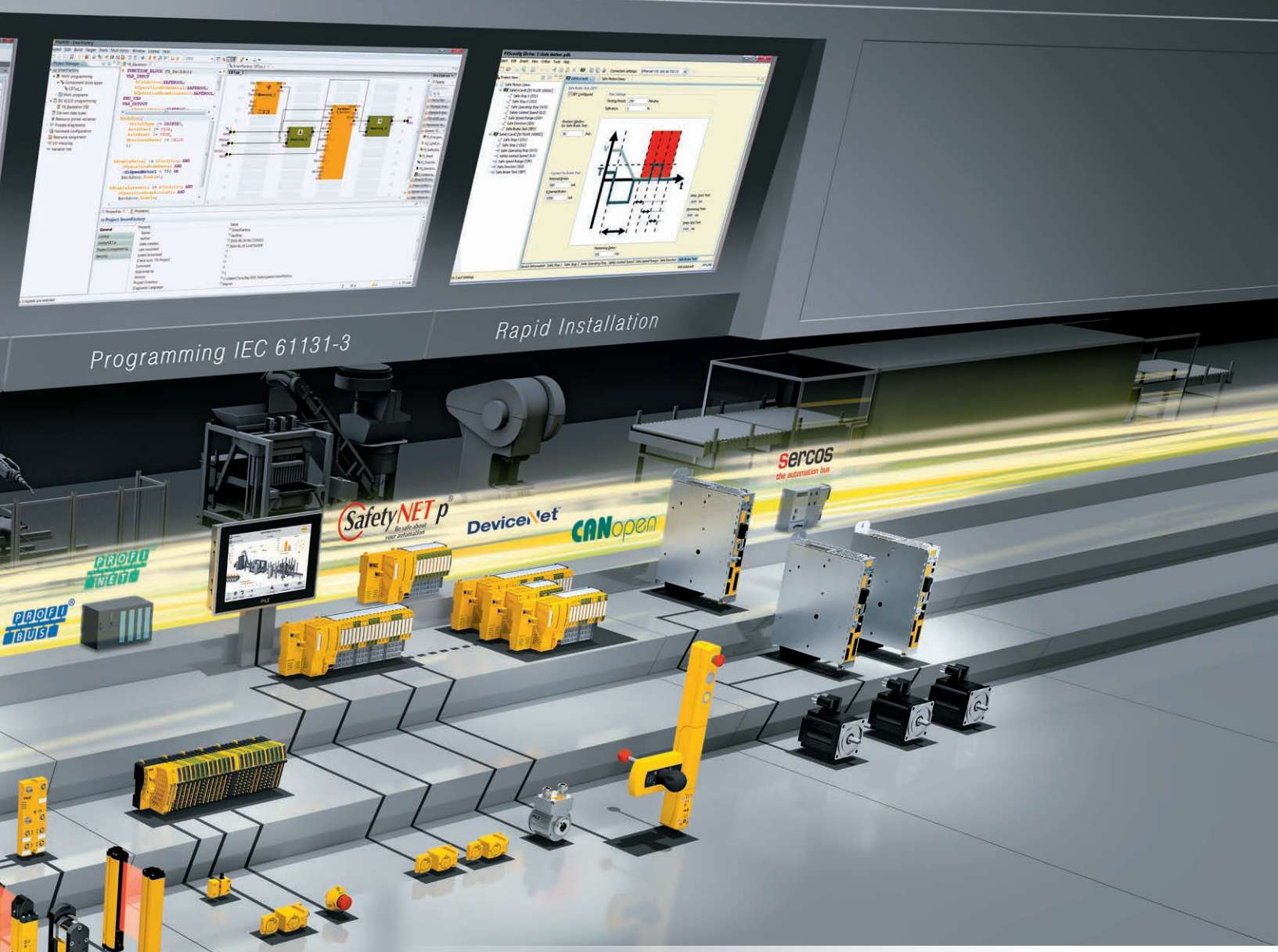

Pilz automation solutions

- Simple configuration, programming and visualization through innovative software solutions
- High flexibility due to individually expandable solutions
- Openness of communication
- High availability thanks to extensive diagnostic options
- One system for safety and automation

and functional safety, through to complete machine control.

Safe sensors and decentralized modules from Pilz guarantee the efficient, compliant use of plant and machinery in combination with various control systems. Our turnkey systems and universally compatible solutions offer a high savings potential.

Drive technology from Pilz is characterized by drive-integrated safety functions, safe logic functions and the connection of visualization, sensor and actuator technology.

Operator and visualization systems from Pilz complete your plant and machinery.

Automation software from Pilz allows you to quickly and easily implement your planning, programming, configuration, commissioning, diagnostics and visualization.

Pilz offers you automation solutions for the safety of man, machine and the environment.

Sensor technology

Comprehensive and individual: benefit from an extensive portfolio of safety sensors that conform to international standards and have been tested by certification bodies. As the sensors were developed, great value was placed on performance, robustness, quality – and ease of operation. Combined with control technology from Pilz, you receive a safe and economical complete solution. High availability and productivity, as well as maximum safety, are guaranteed for your plant and machinery.

Selection guide sensor technology	10
Safety Device Diagnostics (SDD)	14
Devices for position monitoring	16
Safety switches	20
Safety gate systems	48
Light curtains	68
Safety laser scanner	94
Safe camera systems	98
Collision measurement set for human-robot collaboration (HRC)	108

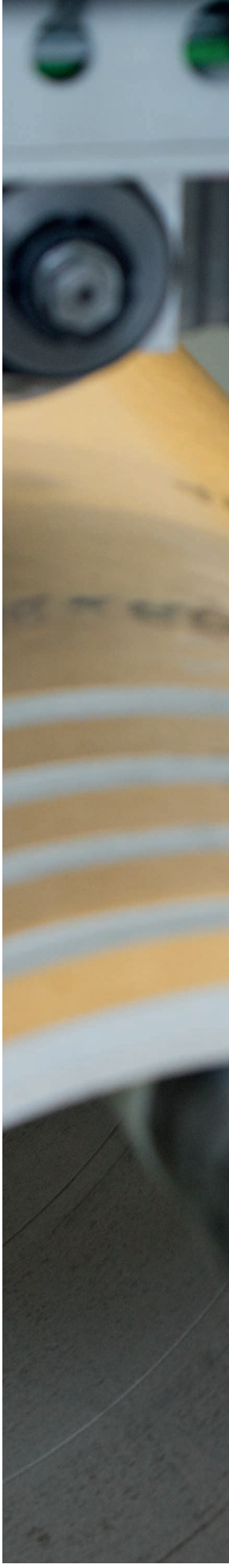


PILZ
PILZ

Strong solution – with safe sensor technology PSEN®

Play it safe during the automation of your plant and machinery: sensor technology, control technology, drive technology and visualization from one source – the complete solution from Pilz.

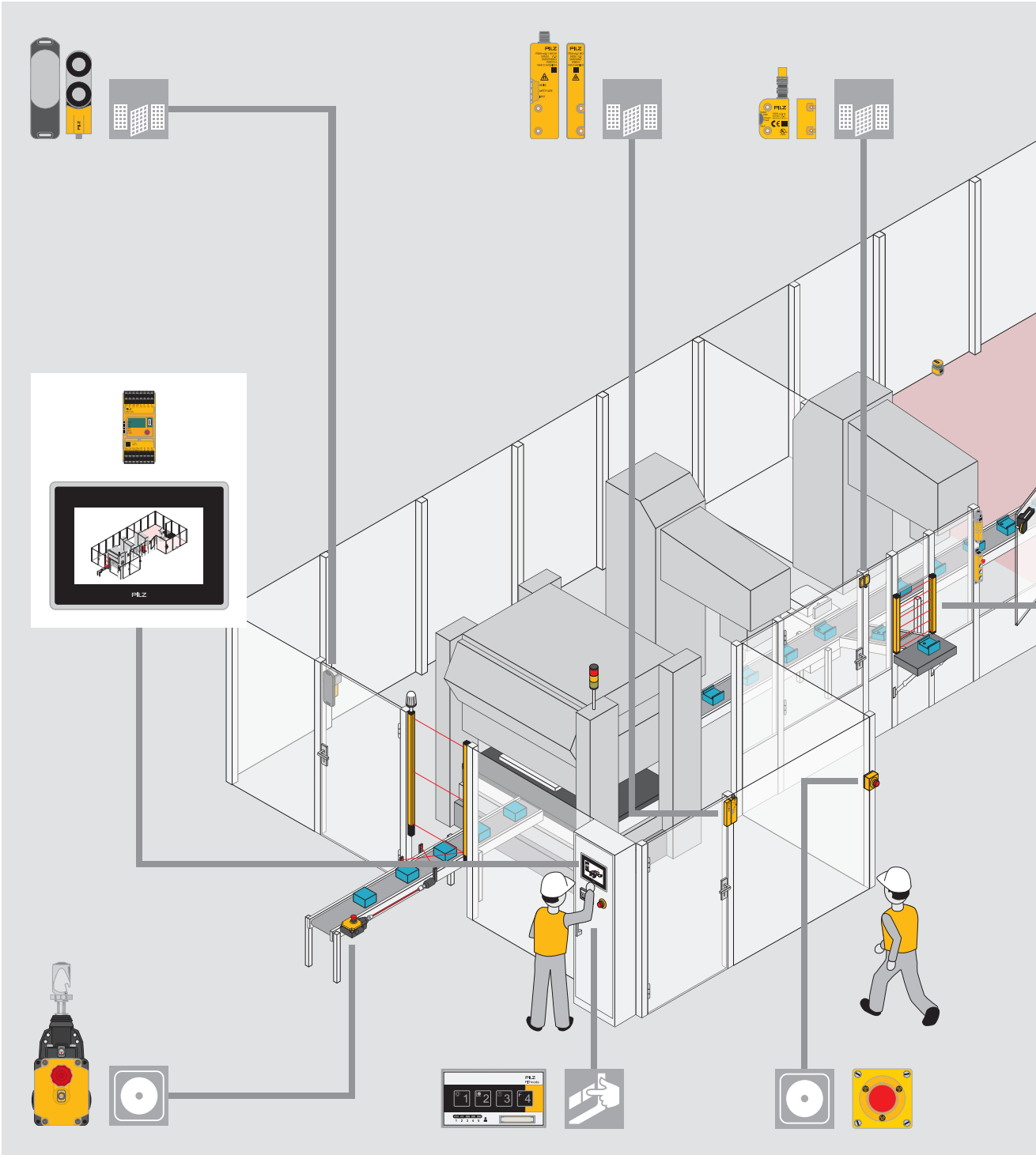

The complete, one-stop solution that's safe and economical:
sensor technology, control technology, drive technology and visualization from Pilz.

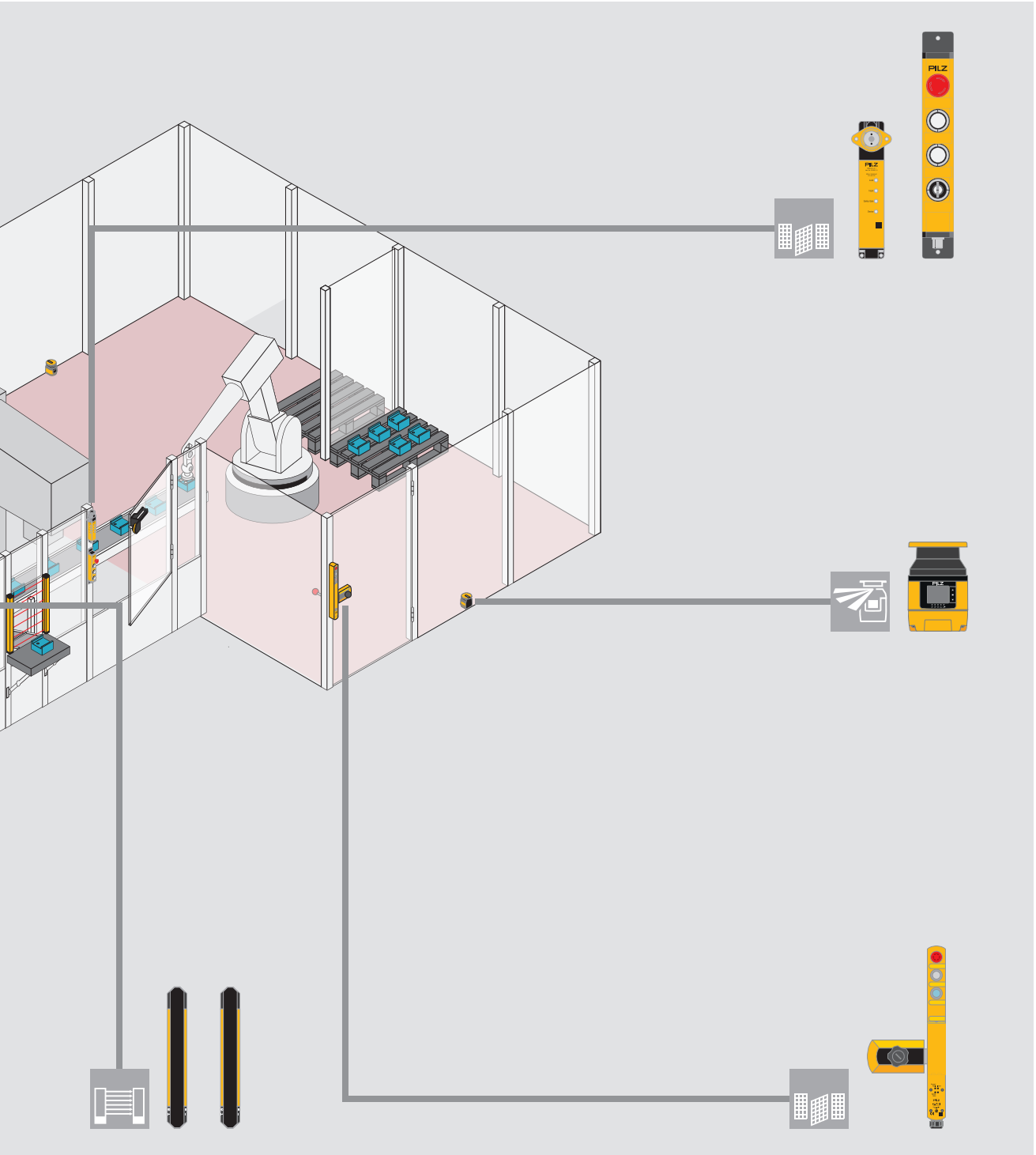

Keep up-to-date on sensor technology PSEN:

Webcode: web150521

Control devices:

Webcode: web150559

Online information at www.pilz.com

For every requirement – Safe sensors PSEN®

Free choice for your application

Safe sensors are suitable for use on covers, flaps, rolling doors, safety gates, cams, electrosensitive protective equipment and for position detection. In the overview you'll find the right sensors to suit your safety requirement. For example, if your safety gate needs a sensor with no guard locking function, with non-contact operation and the highest level of manipulation protection, PSENcode is the right choice.

The right technology

The high variability of safe sensors PSEN is apparent in the different technologies: whether mechanical, magnetic, RFID, optical or camera-based – Pilz has used its know-how and experience to make optimum use of all technologies.

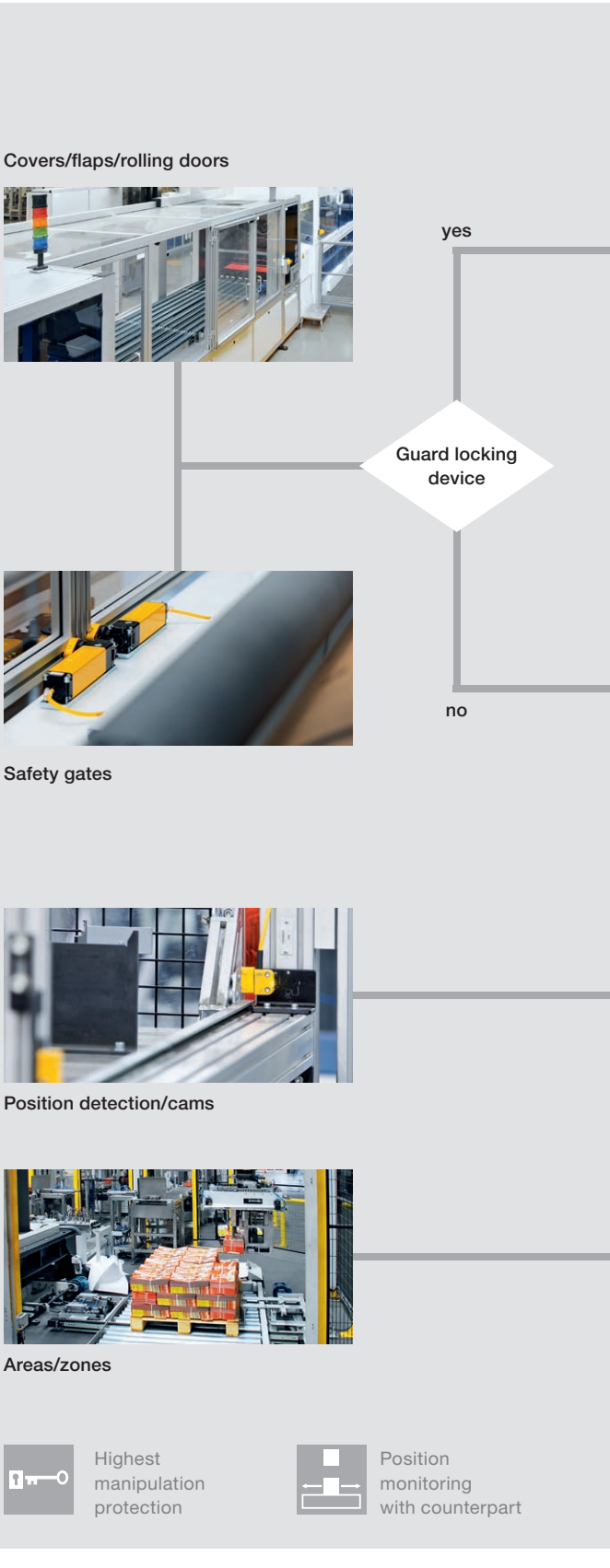

Keep up-to-date on sensor technology PSEN:

Webcode: web150521

Online information at www.pilz.com

Dead voltage closed		**Safety gate system PSENsgate**	From page 62
		Safety gate system PSENmlock	From page 56
		Mechanical safety switch PSENmech (me1S)	From page 22
		Safety bolt PSENbolt with PSEN me1S (spring force)	From page 44
Dead voltage open		**Safety gate system PSENslock**	From page 50
		Mechanical safety switch PSENmech (me1M)	From page 22
		Safety bolt PSENbolt with PSEN me1M (magnetic force)	From page 44
Mechanical		**Safety bolt PSENbolt** with PSEN ma1.4	From page 44
		Safe hinge switch PSENhinge	From page 46
Non-contact	Normal manipulation protection	**Magnetic safety switch PSENmag**	From page 26
		Safety bolt PSENbolt with PSEN ma1.4	From page 44
Non-contact	Highest manipulation protection	**Coded safety switch PSENcode**	From page 34
		Safety bolt PSENbolt with PSENcode	From page 44
Non-contact	With counterpart	**Magnetic safety switch PSENmag**	From page 26
		Coded safety switch PSENcode	From page 34
Area monitoring (2D), press brakes		**Light curtains PSENopt II – new generation**	From page 72
		Light curtains PSENopt Advanced	From page 74
		Light curtains PSENopt slim	From page 76
		Safety laser scanners PSENscan	From page 94
		Camera-based protection systems PSENvip	From page 98

Emergency stop pushbuttons

Light curtains

Safety gate

Safety laser scanners

Safety Device Diagnostics

Safety Device Diagnostics (SDD) provides simple and comprehensive diagnostics for safety devices. The function of the signal I/Os of the safety devices, such as PSENcode for example, is extended. Status information is queried, configuration parameters read and actions performed. Safety Device Diagnostics is the ideal solution for your application as it provides you with an overview of the safety devices at all times and from any location.

SDD
SAFETY DEVICE DIAGNOSTICS

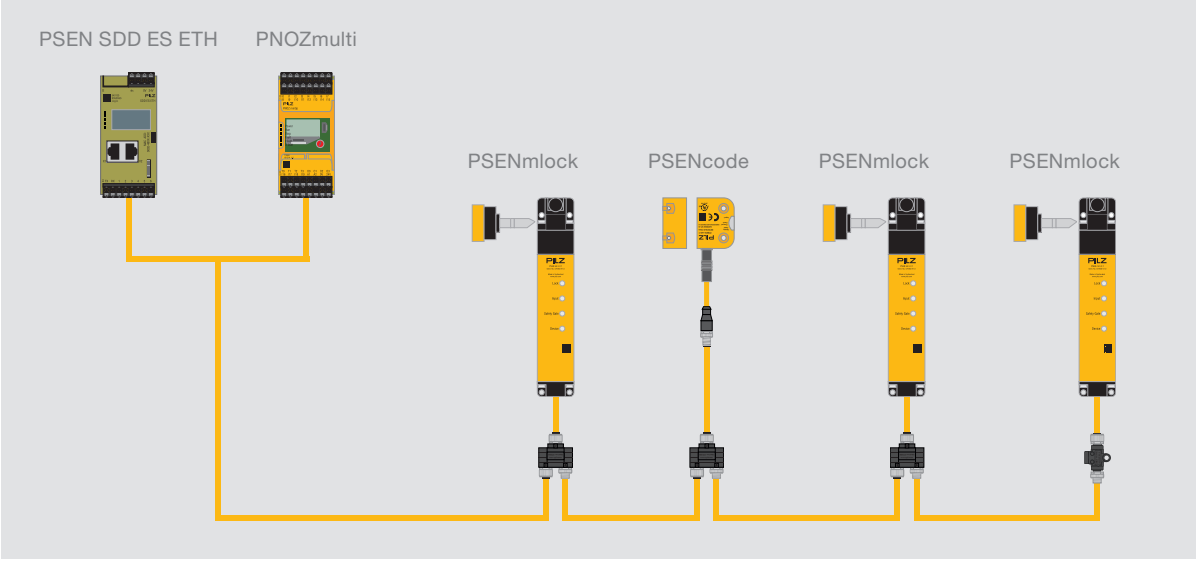

Fewer service calls, greater availability

The availability of plant and machinery is also determined by safety devices. The extended diagnostic possibilities of Pilz safety devices with Safety Device Diagnostics can reduce service calls to your customers. End users benefit from a higher machine availability thanks to faster fault diagnostics. Safety Device Diagnostics can also provide an interface to the plant bus for all safety devices. Thanks to its expandability, Safety Device Diagnostics supports a modular machine structure.

Same sensor, extended diagnostics

Safety Device Diagnostics consists of a fieldbus module plus junction and safety devices (e.g. sensors). The safety devices are automatically activated by the fieldbus module so that the signal contacts for the Safety Device Diagnostics are enabled. For example, a simple series connection of sensors in the field and remote maintenance via web server are possible. The solution using Safety Device Diagnostics therefore provides many more advantages than a conventional wiring of signal contacts. You decide which solution is optimum for your needs: the sensor remains the same.

Type code for Safety Device Diagnostics

SDD ES ETH

Product group **S**afety **D**evice **D**iagnostics	**Version**	
SDD ES – Safety Device Diagnostics electronic module standard	**ETH**	**Communication module with ETH interface**
	PROFIBUS	Communication module with PROFIBUS interface
	PROFINET	Communication module with PROFINET interface
	EtherNet/IP	Communication module with EtherNet/IP interface

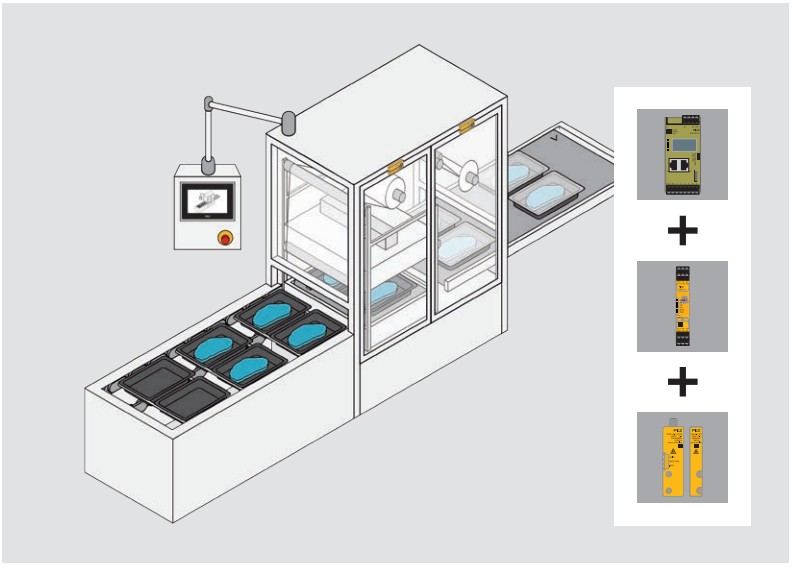

Components for your safe solution	Order number
Sensor: PSEN cs6.11	542 111
Connection: PSEN cable, M12, 8-pin, 5 m distributor IP20	540 320 535 112
Evaluation device: PNOZ s3	751 103
Fieldbus module: SDD ES ETH - spring-loaded terminals - plug-in screw terminals	540 130 540 121 540 120

The coded safety switches PSENcode or PSENmlock, which are often connected in series, are ideal here.

Your benefits at a glance

- Comprehensive diagnostics for reducing down times and number of service calls
- Simple diagnostics thanks to use of the same sensors and optional IP67 cabling
- Information is received directly via the display on the fieldbus module
- Targeted activation of individual sensors in the chain
- Quick and easy installation due to series connection in the field
- Third-party devices can be connected directly via the I/Os on the fieldbus module
- Cost-effective complete solution, e.g. with PNOZ X, PNOZsigma, PSS 4000

Selection guide – Safety Device Diagnostics

Type	Features	Order number
SDD ES ETH Starter Set	Communication module with ETH connection, 2 PSENcode sensors, junction, PSEN cable, Ethernet cable, power supply, spring-loaded terminals	540 110
SDD ES ETH	Communication module with ETH connection	540 130
SDD ES PROFIBUS	Communication module with PROFIBUS connection	540 132
SDD ES PROFINET	Communication module with PROFINET connection	540 138
SDD ES EIP	Communication module with EtherNet/IP connection	540 137
SDD ES EtherCAT	Communication module with EtherCAT connection	540 136
SDD ES Set Screw Terminals	Plug-in screw terminals	540 120
SDD ES Set Spring Loaded Terminals	Spring-loaded terminals	540 121

Common features

- System consisting of fieldbus module, junction and safety devices (e.g. PSENcode, PSENmlock)
- Safety devices activated automatically via the fieldbus module
- Suitable for 16 sensors wired in series or individually wired
- 6 additional configurable I/Os
- Cable lengths:
  - Overall max. 900 m
  - Device 1 to device 2: 50 m
  - Last device to communication module: 150 m
- Reaction times (not safety-related):
  - Safety-related data: see individual safety device
  - Diagnostic data: < 2 seconds

Cable selection:

From page 138

Keep up-to-date on Safety Device Diagnostics:

Webcode: web150456

Online information at www.pilz.com

Safe rope pull switch PSENrope

Whether on the assembly line or the machine – where safety in the production area is concerned, the safe rope pull switch PSENrope is a proven, reliable solution. PSENrope switches off functional processes by manual action. It provides maximum safety, as the emergency stop function can be triggered at any point along the rope.



PSEN rs1.0



PSEN rs2.0

Optimum safety solution is as simple as that

PSENrope is flexible to use, easy to install and simple to operate. Whether it's a first-time installation or upgrade: the safe rope-pull switch PSENrope simplifies installation for you with its well thought-out technical details.

Durable – even under extreme conditions

As the operating range of rope pull switches is limited only by the length of the rope, even large plants can be safeguarded using PSENrope. Due to its rugged finish, PSENrope is reliable even under extreme environmental conditions.





Type code for PSENrope

PSEN rs1.0-300

Product area Pilz **SEN**sors	Housing material	Contacts	Max. spring force to tension the rope
Product group **rs – PSENrope**	**1 Aluminium die cast** 2 Plastic	**0 2 N/C, 2 N/O**	175 175 N **300 300 N**
Operation Mechanical			

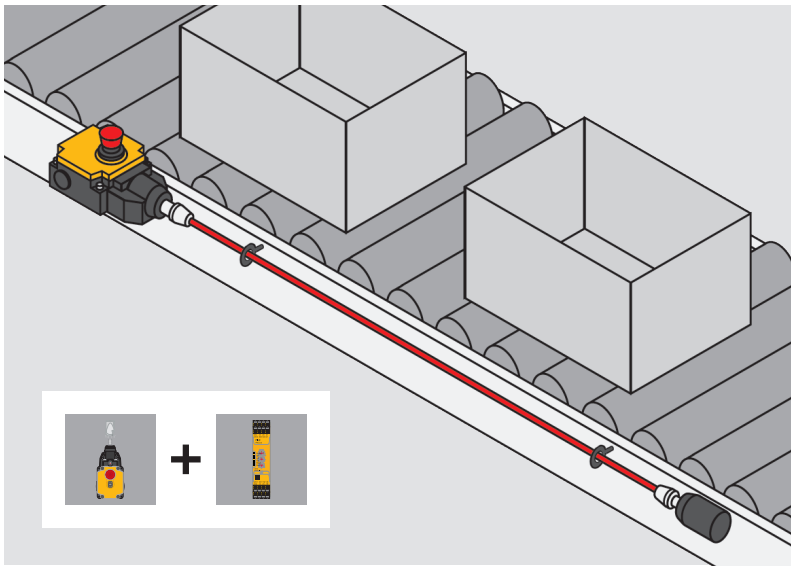

Greater safety on the production line: the rapid emergency stop with rope pull switch PSENrope in combination with the safety relay PNOZsigma.

Your benefits at a glance

- High level of safety:
  - Safe from manipulation
  - Wiring space physically separate from mechanics
  - Dual-function emergency stop button and pull release
- Whether it's a first-time installation or upgrade: PSENrope simplifies installation
- Suitable for indoor and outdoor use thanks to rugged, hard-wearing metal or plastic housing

Selection guide – safe rope pull switch PSENrope



PSEN rs1.0-175

Type	Housing material	Maximum rigging length	Certification	Order number
PSEN rs1.0-175	Aluminium die cast	37.5 m	CSA, DGUV	570301
PSEN rs1.0-300	Aluminium die cast	75.0 m	CSA, DGUV	570300
PSEN rs2.0-175	Plastic	37.5 m	CSA, DGUV	570303
PSEN rs2.0-300	Plastic	75.0 m	CSA, DGUV	570302

Common features

- Integrated emergency stop pushbutton
- Contacts: 2 N/C, 2 N/O
- Protection type: IP67
- Ambient temperature:
  - PSEN rs1.0: -30 … +80 °C
  - PSEN rs2.0: -25 … +70 °C
- Dimensions (H x W x D) in mm:
  - PSEN rs1.0: 237 x 90.0 x 88
  - PSEN rs2.0: 294 x 42.5 x 88

Accessories – safe rope pull switch PSENrope



PSEN rs pulley flex

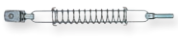

PSEN rs spring

Description/type	Features	Quantity	Order number
Block rope pulley **PSEN rs pulley flex**	Rotatable	1	570313
Rope for rope pull switch **PSEN rs rope d3/d4**	▸ Rope diameter: 3 mm ▸ Insulation diameter: 4 mm ▸ PVC-coated, red	1	50 m ____ 570314 100 m ____ 570315
Pulley **PSEN rs pulley 75**	Ø 75 mm	1	570312
Cage clamp **PSEN rs spring**	Steel, max. spring force to tension the rope		
	175 N	1	570310
	300 N	1	570311

Cable selection:

From page 138

Keep up-to-date on safe rope-pull switches PSENrope:

Webcode: web150404

Online information at www.pilz.com

Rotary encoder PSENenco

The rotary encoders PSENenco are used to determine position and speed. The rotary encoder is an absolute encoder that is used in the automation system PSS 4000. It supplies diverse, absolute position values, which are verified in the software block. The rotary encoder has a magnetic and an optical measuring system and thus combines two units in one.

Part of PSS 4000



PSEN enc m1 eCAM



PSEN enc m2 eCAM

Standard rotary encoder, but safe

The rotary encoder PSENenco is a standard encoder – but through the combination of the control system PSSuniversal PLC, the rotary encoder and software blocks, the system reaches SIL CL 3 and PL e.

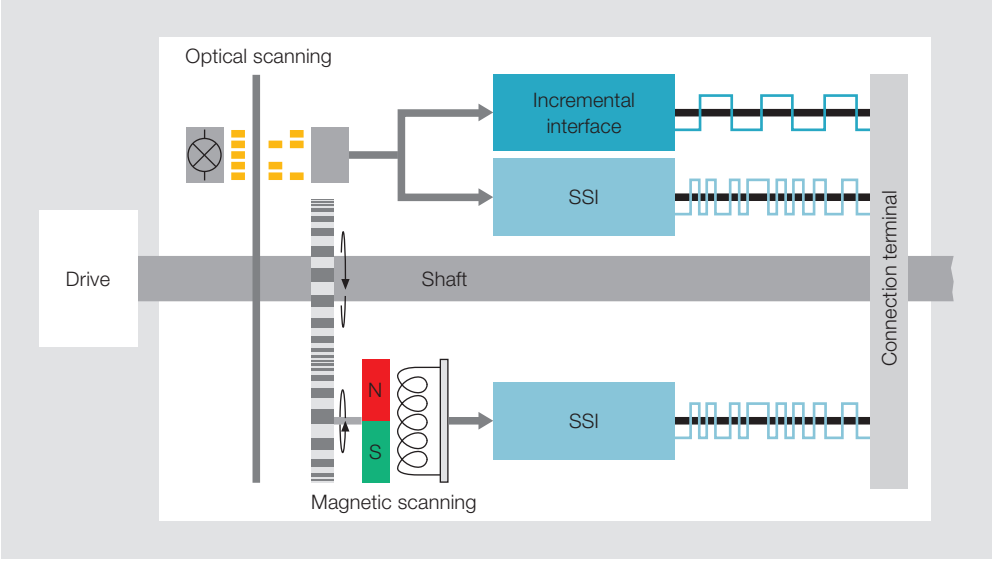

Redundant, dual-channel rotary encoder.

Type code for PSENenco

PSEN enc m1 eCAM

Product area Pilz **SEN**sors	Rotary encoder feature	Series	Design
Product group **enc – PSENenco**	**m** Multi-turn s Single-turn	**1** Hollow shaft 2 Solid shaft	**eCAM** Electronic rotary cam arrangement
Operation Magnetic and optical			

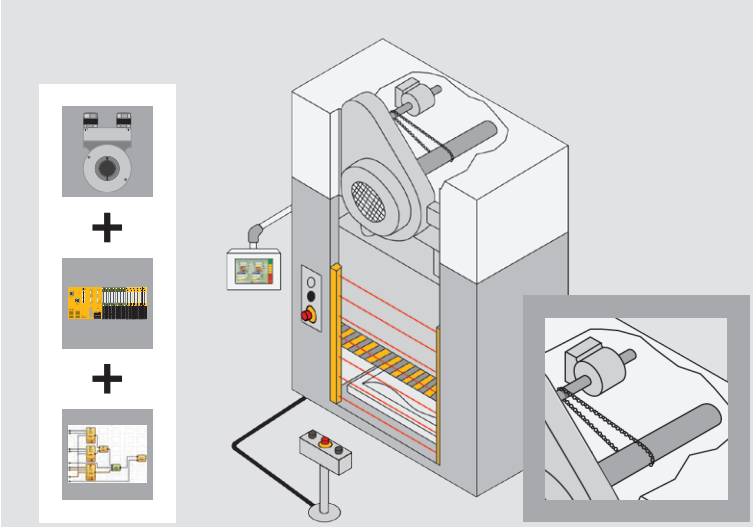

Your benefits at a glance

- Safe evaluation of speed and position
- The safe monitoring function is transferred to the user software
- High flexibility when monitoring limit values due to dynamic limit value monitoring in the user program
- Mechanical rotary cam arrangement is replaced by the safe electronic rotary cam arrangement PSS 4000 incl. PSENenco

Components for your safe solution	Order number
Sensor: PSEN enc m1 eCAM	544021
Connection: Signal cable, min. 0.25 mm², shielded, stranded pair	-
Evaluation device: PSSu PLC1 FS SN SD	312070

The optimum solution: rotary encoder, control system and software = safe electronic rotary cam arrangement.

Application of PSENenco

The rotary encoder PSENenco is used in the mechanical press sector, for instance. The Pilz “safe electronic rotary cam arrangement” solution completely replaces conventional mechanical rotary cam arrangements. Further application areas can be found anywhere that safe position detection is required.

Selection guide – rotary encoder PSENenco



PSEN enc m1 eCAM

Type	Function	Rotary encoder feature	Order number
PSEN enc m1 eCAM	Absolute encoder	Multi-turn, hollow shaft	544021
PSEN enc m2 eCAM	Absolute encoder	Multi-turn, solid shaft	544022
PSEN enc s1 eCAM	Absolute encoder	Single-turn, hollow shaft	544011
PSEN enc s2 eCAM	Absolute encoder	Single-turn, solid shaft	544012

Common features

- 2 encoders in one housing
- Diverse, 2-channel (1 x optical, 1 x magnetic)
- 2 SSI interfaces
- SIL CL 3 and PL e in the automation system PSS 4000

Keep up-to-date on rotary encoders PSENenco:

Webcode: web150403

Online information at www.pilz.com

Safety switches

Safety switches from Pilz are used for cost-optimized safety gate and position monitoring and meet the requirements of EN ISO 14119 (successor standard to EN 1088) at particularly low cost. That's why they are used for applications in mechanical engineering as well as in the packaging or pharmaceutical industry and many other sectors.

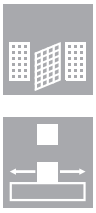



PSENmech PSENmag PSENcode PSENbolt PSENhinge







Safety switches are available with various designs and operating principles and can even be used under difficult environmental conditions. Additional costs can be saved when connected in series.

Choose the optimum switch for your application:

- Mechanical – PSENmech offers personnel and process protection with safe guard locking
- Non-contact, magnetic – with concealed installation PSENmag is the most economical solution – for the highest safety requirements
- Non-contact, unique, fully coded – PSENcode allows maximum freedom in installation thanks to the highest manipulation protection for guards, as required in EN ISO 14119
- Non-contact, coded – PSENcode x.19n is suitable for safe monitoring and distinguishing up to 3 positions

Safety bolt – the robust, cost-effective solution for a rugged industrial environment

The safety bolt PSENbolt is particularly suitable for safety gates that are difficult to adjust or in areas where safety gates are often opened and closed. What you get is a complete solution comprising safety switch, handle and bolt.

Safe hinge switch – bundled hinge and safety switch

The combination of hinge and safety switch is the optimum solution for hinged safeguards. Designed as one functional and installation unit, the safe hinge switch PSENhinge offers a high level of flexibility in installation, connection and adjustment.

Selection guide – safety switches and safe hinge switches

Type	Safety switch PSENmech	Safety switch PSENmag	Safety switch PSENcode	Safety switch PSENcode	Hinge switch PSENhinge
Mode of action/Coding	Mechanical	Non-contact, magnetic	Non-contact, coded	Fully coded, unique fully coded	Mechanical
Application					
Covers	◆	◆	◆	◆	
Flaps	◆	◆	◆	◆	◆
Hinged safety gates	◆	◆	◆	◆	◆
Sliding safety gates	◆	◆	◆	◆	
Rolling doors		◆	◆	◆	
Position detection		◆	◆	◆	
Guard locking device	With	Without	Without	Without	Without
IP protection type	IP65/IP67	IP65/IP67/IP6K9K	IP67/IP6K9K	IP67/IP6K9K	IP67
Performance level [1]					
PL e	2 x	1 x	1 x	1 x	2 x
PL d	1 x + FE[2]	1 x	1 x	1 x	1 x + FE[2]
PL c	1 x	1 x	1 x	1 x	1 x
Classification in accordance with EN ISO 14119					
Type	2	4	4	4	1
Coding stage	Low	Low	Low	High	-

[1] Achievable performance level depends on application
[2] FE = Fault exclusion

Safety gate systems:
From page 48

Keep up-to-date on safety switches:
Webcode: web150523

Online information at www.pilz.com

Mechanical safety switch PSENmech

The mechanical safety switch PSENmech is suitable for safe monitoring of a movable guard and can lock the safety gate securely.



PSEN me1

PSENmech uses increased extraction force on the actuator to prevent the safety gate from being opened unintentionally. It complies with the standard EN 14119 due to its coded actuators.

Safety gate monitoring with guard locking guarantees the safety of persons or processes. One version of the mechanical safety switch PSEN me1 fulfils two safety functions:

- Avoids an unexpected start-up when PSEN me1 is unlocked or not closed
- Safety gate locked by the PSEN me1 while the motor speed is > 0

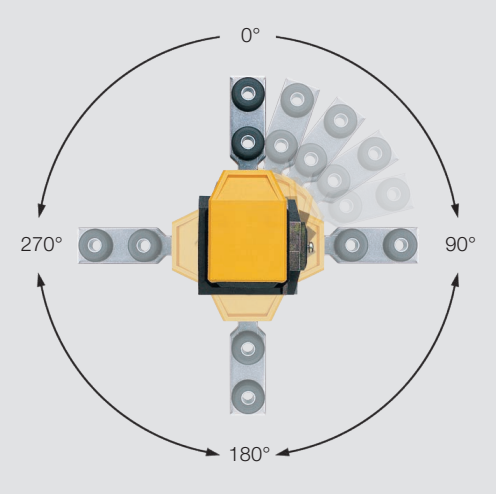

Universal actuation directions provide flexibility during installation.

Type code for PSENmech

PSEN me1.2S/1AR

Product area Pilz **SEN**sors	Product series	Series 1: Type of guard locking/ supply voltage	Series/actuator type
Product group me – PSENmech	**1 With guard locking, dimensions: 170 x 42.5 x 51 mm**	S Spring force, 24 VAC/DC (2 N/C, 2 N/O) **.2S Spring force, 110, 230 VAC (2 N/C, 2 N/O)** M Magnetic force, 24 VAC/DC (2 N/C, 2 N/O) .21S Spring force, 110, 230 VAC (3 N/C, 1 N/O)	1AS Standard, Series 1 **1AR Radius, Series 1**
Operation Mechanical			

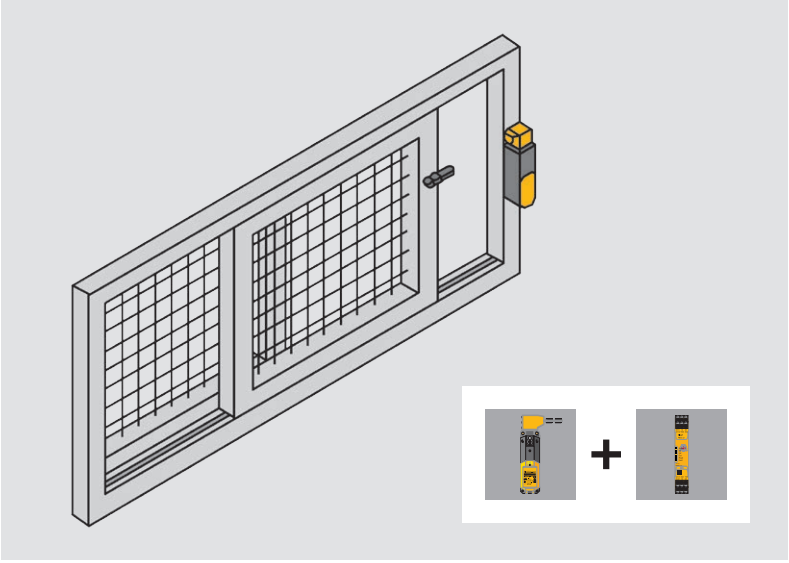

Components for your safe solution	Order number
Sensor: PSEN me1M/1AS	570004
Connection: Cable, depending on function, e.g. 8 x 0.5 mm²	-
Evaluation device: PNOZ s3	751103

The optimum solution: monitoring sliding gates using the safety switch PSENmech and safety relay PNOZsigma.

Your benefits at a glance

- Safe, complete solution in conjunction with Pilz evaluation devices for applications with high safety requirements
- Flexibility and speed during installation due to:
  - Compact design
  - Radius or standard actuator
  - Up to 4 horizontal and 4 vertical approach directions
- Long product service life due to the robust design and high mechanical load capacity
- Suitable for a variety of applications due to the wide operating temperature range
- Housing is insensitive to dirt and dust and is also waterproof

Accessories – mechanical safety switch PSENmech

Description Type	Features	Quantity	Order number
One-way screw to secure the actuator	▸ Stainless steel ▸ Drive: one-way slot (safety screw)		
PSEN screw M4x16	▸ M4, 16 mm ▸ Suitable for PSEN me1/1AS and PSEN me4	10	540310
PSEN screw M5x20	▸ M5, 20 mm ▸ Suitable for PSEN me1/1AR, PSEN me2 and PSEN me3	10	540312

Cable selection:

From page 138

Keep up-to-date on mechanical safety switches PSENmech:

Webcode: web150414

Online information at www.pilz.com





Selection guide – PSENmech

Mechanical safety switch PSENmech with separate actuator and guard locking device

Common features

- Safety switch for monitoring the position of movable guards in accordance with EN 60947-5-3
- Suitable for applications up to:
  - PL e of EN ISO 13849-1
  - SIL CL 3 of EN/IEC 62061
- Can be connected to all Pilz evaluation devices
- Directions of actuation:
  - PSEN me1: 8
  - PSEN me3: 4
  - PSEN me4: 8
- Dimensions (H x W x D, excl. actuator) in mm:
  - PSEN me1: 170 x 42.5 x 51.0
  - PSEN me3: 90 x 52.0 x 33.0
  - PSEN me4: 100 x 31.0 x 30.5
- Ambient temperature:
  - PSEN me1: –25 … +70 °C/–13 … +158 °F
  - PSEN me3/me4: 0 … +80 °C/-22 … +176 °F
- Connection terminals:
  - PSEN me1: Spring-loaded terminals
  - PSEN me3/me4: Screw terminals
- Protection type:
  - PSEN me1: IP67
  - PSEN me3/me4: IP65



PSEN me1S/1AS



PSEN me3/2AR



PSEN me4/4AS

Type (switch/actuator)	Type of guard locking	Actuator type
Base versions		
PSEN me1S/1AS	Spring force	Standard
PSEN me1.2S/1AS	Spring force	Standard
PSEN me1S/1AR	Spring force	Radius
PSEN me1.2S/1AR	Spring force	Radius
PSEN me1M/1AS	Magnetic force	Standard
PSEN me1M/1AR	Magnetic force	Radius
PSEN me1.21S/1AR	Spring force	Radius
PSEN me3/2AS	-	Standard
PSEN me3.2/2AS	-	Standard
PSEN me3.2/2AR	-	Radius
PSEN me4.1/4AS	-	Standard
PSEN me4.2/4AS	-	Standard
Versions with additional M12, 8 or 5-pin plug-in connector		
PSEN me1.02S/AS M12	Spring force	Standard
PSEN me1.02S/AR M12	Spring force	Radius
PSEN me1.02M/AS M12	Magnetic force	Standard
PSEN me1.02M/AR M12	Magnetic force	Radius
PSEN me1.03M/AS n	Magnetic force	Standard

Contacts	Supply voltage/ contact load Utilization category AC-15	Auxiliary release	Holding force	Extraction force	Certification	Order number (Unit) [1]
2 N/C, 2 N/O	24 VAC/DC	◆	1500 N	min. 27 N	CCC, CSA, DGUV, EAC	570000
2 N/C, 2 N/O	110 … 230 VAC	◆	1500 N	min. 27 N	CCC, CSA, DGUV, EAC	570006
2 N/C, 2 N/O	24 VAC/DC	◆	1500 N	min. 27 N	CCC, CSA, DGUV, EAC	570001
2 N/C, 2 N/O	110 … 230 VAC	◆	1500 N	min. 27 N	CCC, CSA, DGUV, EAC	570007
2 N/C, 2 N/O	24 VAC/DC		1500 N	min. 27 N	CCC, CSA, DGUV, EAC	570004
2 N/C, 2 N/O	24 VAC/DC		1500 N	min. 27 N	CCC, CSA, DGUV, EAC	570005
3 N/C, 1 N/O	110 … 230 VAC	◆	1500 N	min. 27 N	CCC, CSA, DGUV, EAC	570008
1 N/C, 1 N/O	240 V/3.0 A		-	10 N	CCC, CSA, DGUV, EAC	570210
2 N/C, 1 N/O	240 V/1.5 A		-	10 N	CCC, CSA, DGUV, EAC	570230
2 N/C, 1 N/O	240 V/1.5 A		-	10 N	CCC, CSA, DGUV, EAC	570232
2 N/C	240 V/3.0 A		-	10 N	CCC, CSA, DGUV, EAC	570245
2 N/C, 1 N/O	240 V/1.5 A		-	10 N	CCC, CSA, DGUV, EAC	570251
	24 VAC/DC	◆	1500 N	min. 27 N	CCC, CSA, DGUV, EAC	570011
	24 VAC/DC	◆	1500 N	min. 27 N	CCC, CSA, DGUV, EAC	570012
	24 VAC/DC		1500 N	min. 27 N	CCC, CSA, DGUV, EAC	570013
	24 VAC/DC		1500 N	min. 27 N	CCC, CSA, DGUV, EAC	570014
	24 VAC/DC		1500 N	min. 27 N	CCC, CSA, DGUV, EAC	570015

2 N/C contact
2 N/O contact

[1] Unit comprising switch and actuator

Cable selection:

From page 138

Keep up-to-date on mechanical safety switches PSENmech:

Webcode: web150414

Online information at www.pilz.com

Magnetic safety switch PSENmag

Magnetic safety switches are used both for monitoring the position of guards in accordance with EN 60947-5-3 and for position monitoring. Thanks to economical series connection, PSENmag offers maximum safety at a "low price" and is easily integrated into the existing system environment.

IP67



PSEN ma1.4a



PSEN ma1.4p



PSEN ma2.1p



PSEN ma1.3a VA

Manipulation protection

The concealed installation of the sensor – as defined in accordance with EN ISO 14119 – prevents manipulation. Other ways of manipulation are excluded if the actuator is secured using safety screws (one-way drive head). If the highest manipulation protection is required, we recommend PSENcode due to the RFID technology and the key lock principle.

High requirements – implemented economically

Use PSENmag wherever a high category is specified, heavy soiling occurs or strict cleaning requirements are to be met.

The rugged, fully encapsulated housing in conjunction with the non-contact, magnetic operating principle guarantees a long product service life.

Flexible application

The compact design of the PSENmag saves installation space. A large selection of connectors and cables plus an assured operating distance of 3 to 12 mm enable flexible assembly and rapid, simple installation.

Type code for PSENmag

PSEN ma1.4b-50 VA

Product area Pilz **SEN**sors	Contacts	Design	Connection type	Operating distance	LED/ATEX/ Series connection	Material
Product group **ma – PSENmag**	**1 N/O/N/O** 2 N/C/N/O	1 Square, dimensions: 36 x 26 x 13 mm 2 Round, M30 3 Round, M12 **4 Square, dimensions: 37 x 26.4 x 18 mm**	a Cable, 5 m **b Cable, 10 m** n Connector, M12, 5-pin p Connector, M8: - 4-pin (2 contacts) - 8-pin (3 contacts) M12/8 Connector, M12, 8-pin	1 3 mm 2 8 mm/ 12 mm [1] 3 6 mm 4 4 mm **5 3 mm/ 10 mm** [1]	**0 Without LED** 1 With LED 2 Only with PSEN ix1 [2] 3 ATEX, without LED 4 ATEX, with LED 5 ATEX, without LED, only with PSEN ix1 [2] 6 ATEX, without LED 7 With LED, only with PSEN ix1 [2] 8 ATEX, with LED, only with PSEN ix1 [2] 9 Special types	**VA Stainless steel**
Operation Non-contact, magnetic						

[1] Depends on the actuator [2] Ri = 0 Ω

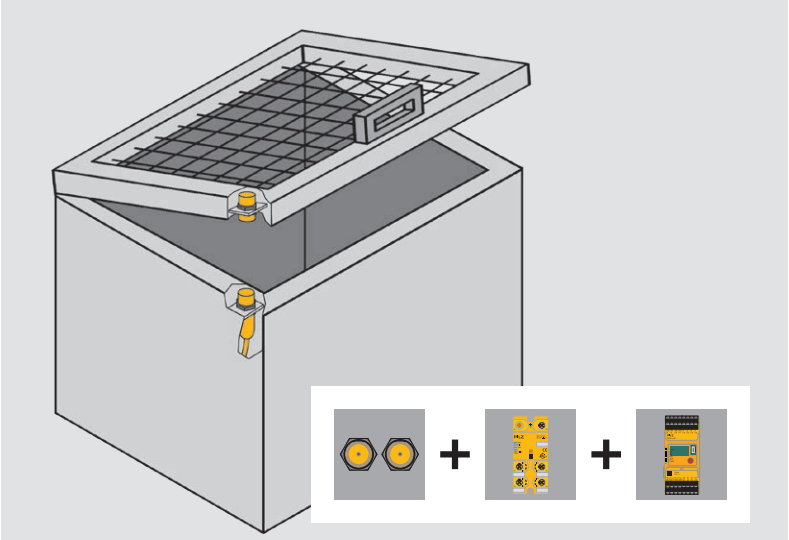

Components for your safe solution	Order number
Sensor: PSEN ma1.3n-20/PSEN ma1.3-12	506238
Connection: PSS67 cable, M12, straight, socket/M12, straight, plug, 5 m	380209
Decentralized periphery: PDP67 F 8DI ION	773600
Connection: PSEN cable, straight, M12, 5-pin	630311
Evaluation device: PNOZ m B0 - Spring loaded terminals (1 set)	772100 751008

The optimum solution: Monitoring a cover using the safety switch PSENmag and using the configurable safe small controllers PNOZmulti 2.

Your benefits at a glance

- Safe complete solution with TÜV certification for the highest category applications.
- Economical thanks to:
  - Space and time-saving installation
  - Long product service life as it is mechanically non-wearing
  - User-friendly diagnostics via an additional signal contact and LED
- Can be used with heavy soiling and stringent cleaning requirements IP67/IP6K9K, ECOLAB tested
- High level of safety, even in potentially explosive areas
- Stainless steel version for maximum robustness

High level of safety, maximum robustness: PSENmag in stainless steel

PSENmag stainless steel sensors are not only suitable in areas with heavy soiling and strict cleaning requirements, but also in potentially explosive areas. In addition to being highly heat and cold-proof, they are characterized by their vibration and impact resistance. The high B10D value ensures a long service life.

Cable selection:

From page 138

Keep up-to-date on non-contact, magnetic safety switches PSENmag:

Webcode: web150413

Online information at www.pilz.com





Selection guide – PSENmag

Magnetic safety switch PSENmag – square design

Common features

- Dual-channel safety switch for monitoring the position of movable guards in accordance with EN 60947-5-3
- Certified for applications up to Performance Level e of EN ISO 13849-1 and SIL CL 3 of EN/IEC 62061 in conjunction with safety relays such as PNOZ s4, PNOZ X2.8P, PNOZ mB0
- Optional signal contact
- Direct connection, via PDP67, PDP20 or via the interface PSEN ix1, see accessories page 32
- Protection type:
  - Cable versions: IP6K9K
  - Connector versions: IP67
- Flexible installation due to the housing design and pigtail cable
- Protective caps included for better manipulation protection



PSEN ma2.1p



PSEN ma1.4a



PSEN ma1.4p

Type (switch/actuator)	Assured switching distance
PSEN ma2.1p-10/ PSEN2.1-10/3mm/1 unit	3 mm
PSEN ma2.1p-11/ PSEN2.1-10/LED/3 mm/1 unit	3 mm
PSEN ma2.1p-30/ PSEN2.1-10/6 mm/1 unit	6 mm
PSEN ma2.1p-31/ PSEN2.1-10/LED/6mm/1 unit	6 mm
PSEN ma1.1p-10/ PSEN1.1-10/3 mm/1 unit	3 mm
PSEN ma1.1p-12/ PSEN1.1-10/3 mm/ix1/1 unit	3 mm
PSEN ma2.1p-34/ PSEN2.1-10-06/LED/ATEX/1u	6 mm
PSEN ma1.4a-50/PSEN ma1.4-10	10 mm
PSEN ma1.4a-51/PSEN ma1.4-10	10 mm
PSEN ma1.4a-52/PSEN ma1.4-10	10 mm
PSEN ma1.4a-57/PSEN ma1.4-10	10 mm
PSEN ma1.4p-50/PSEN ma1.4-10	10 mm
PSEN ma1.4p-51/PSEN ma1.4-10	10 mm
PSEN ma1.4p-52/PSEN ma1.4-10	10 mm
PSEN ma1.4p-57/PSEN ma1.4-10	10 mm
PSEN ma1.4n-50/PSEN ma1.4-10	10 mm
PSEN ma1.4n-51/PSEN ma1.4-10	10 mm
PSEN ma1.4-51M12/8-0.15m/ PSEN ma1.4-10	10 mm
PSEN ma1.4a-57/PSEN ma1.4-03	3 mm
PSEN ma1.4a-50/PSEN ma1.4-03	3 mm
PSEN ma1.4a-51/PSEN ma1.4-03	3 mm
PSEN ma1.4a-52/PSEN ma1.4-03	3 mm
PSEN ma1.4p-50/PSEN ma1.4-03	3 mm
PSEN ma1.4p-51/PSEN ma1.4-03	3 mm
PSEN ma1.4p-57/PSEN ma1.4-03	3 mm
PSEN ma1.4p-52/PSEN ma1.4-03	3 mm
PSEN ma1.4n-50/PSEN ma1.4-03	3 mm
PSEN ma1.4n-51/PSEN ma1.4-03	3 mm
PSEN ma1.4-51M12/8-0.15m/ PSEN ma1.4-03	3 mm

Contacts	Single connection	Series connection via	LED	ATEX	Connection type Cable/connector	Certification	Order number (unit) [1]
1 N/O, 1 N/C	◆	-			M8, 4-pin	EAC, TÜV, UL [2]	506405
1 N/O, 1 N/C	◆	-	◆		M8, 4-pin		506406
1 N/O, 1 N/C	◆	-			M8, 4-pin		506407
1 N/O, 1 N/C	◆	-	◆		M8, 4-pin		506408
2 N/O	◆	-			M8, 4-pin		506411
2 N/O		PSEN ix1			M8, 4-pin		506412
1 N/O, 1 N/C	◆	-	◆	◆	M8, 4-pin	ATEX [3], EAC, TÜV, UL [2]	506413
2 N/O	◆	-			5 m	EAC, TÜV, UL [2]	506322
3 N/O	◆	-	◆		5 m		506326
2 N/O		PSEN ix1			5 m		506323
3 N/O		PSEN ix1	◆		5 m		506327
2 N/O	◆	-			M8, 4-pin, pigtail, 20 cm		506334
3 N/O	◆	-	◆		M8, 8-pin, pigtail, 20 cm		506338
2 N/O		PSEN ix1			M8, 4-pin, pigtail, 20 cm		506335
3 N/O		PSEN ix1	◆		M8, 8-pin, pigtail, 20 cm		506339
2 N/O	◆	PDP67			M12, 5-pin, pigtail, 13 cm		506342
3 N/O	◆	PDP67	◆		M12, 5-pin, pigtail, 13 cm		506343
3 N/O	◆	-	◆		M12, 8-pin, pigtail, 13 cm		506345
3 N/O		PSEN ix1	◆		5 m		506325
2 N/O	◆	-			5 m		506320
3 N/O	◆	-	◆		5 m		506324
2 N/O		PSEN ix1			5 m		506321
2 N/O	◆	-			M8, 4-pin, pigtail, 20 cm		506332
3 N/O	◆	-	◆		M8, 8-pin, pigtail, 20 cm		506336
3 N/O		PSEN ix1	◆		M8, 8-pin, pigtail, 20 cm		506337
2 N/O		PSEN ix1			M8, 4-pin, pigtail, 20 cm		506333
2 N/O	◆	PDP67			M12, 5-pin, pigtail, 13 cm		506340
3 N/O	◆	PDP67	◆		M12, 5-pin, pigtail, 13 cm		506341
3 N/O	◆	-	◆		M12, 8-pin, pigtail, 13 cm		506344

N/C contact

N/O contact

[1] Unit comprising switch and actuator

[2] UL certification applies only to individual components contained within the set

[3] ATEX certification applies only to individual components contained within the set

Cable selection:

From page 138

Keep up-to-date on magnetic safety switches PSENmag:

Webcode: web150413

Online information at www.pilz.com

Selection guide – PSENmag

Magnetic safety switch PSENmag – round design

Common features

- Dual-channel safety switch for monitoring the position of movable guards in accordance with EN 60947-5-3
- Certified for applications up to Performance Level e of EN ISO 13849-1 and SIL CL 3 of EN/IEC 62061 in conjunction with safety relays such as PNOZ s4, PNOZ X2.8P, PNOZ mB0
- With signal contact
- Direct connection, via PDP67, PDP20 or via the interface PSEN ix1
- Protection type: IP67



PSEN ma1.3p-20/
PSEN ma1.3-12

Type (switch/actuator)	Assured switching distance
M12 housing	
PSEN ma1.3a-20/PSEN ma1.3-08	8 mm
PSEN ma1.3a-22/PSEN ma1.3-08	8 mm
PSEN ma1.3b-20/PSEN ma1.3-08	8 mm
PSEN ma1.3b-22/PSEN ma1.3-08	8 mm
PSEN ma1.3p-20/PSEN ma1.3-08	8 mm
PSEN ma1.3n-20/PSEN ma1.3-08	8 mm
PSEN ma1.3-20M12/8-0.15m/ PSEN ma1.3-08	8 mm
PSEN ma1.3p-22/PSEN ma1.3-08	8 mm
PSEN ma1.3a-20/PSEN ma1.3-12	12 mm
PSEN ma1.3a-22/PSEN ma1.3-12	12 mm
PSEN ma1.3b-20/PSEN ma1.3-12	12 mm
PSEN ma1.3b-22/PSEN ma1.3-12	12 mm
PSEN ma1.3p-20/PSEN ma1.3-12	12 mm
PSEN ma1.3n-20/PSEN ma1.3-12	12 mm
PSEN ma1.3-20M12/8-0.15m/ PSEN ma1.3-12	12 mm
PSEN ma1.3p-22/PSEN ma1.3-12	12 mm

Magnetic safety switch PSENmag – stainless steel

Common features

- Certified for applications up to PL e of EN ISO 13849-1 and SIL CL 3 of EN/IEC 62061 in conjunction with safety relays such as PNOZ s4, PNOZ X2.8P, PNOZ mB0
- Directions of actuation: 1
- Diagnostic interface: with and without LED
- Design: round
- Assured operating distance: 12 mm
- Protection type: IP67, IP69k
- Stainless steel housing
- Series connection: with PSEN ix1 or PDP67 F8 ION



PSEN ma1.3a-21/PSEN
ma1.3-08/VA/1U

Type (switch/actuator)	Assured switching distance
PSEN ma1.3b-21/PSEN ma1.3-08/VA/1U	8 mm
PSEN ma1.3b-27/PSEN ma1.3-08/IX/VA/1U	8 mm
PSEN ma1.3a-21/PSEN ma1.3-08/VA/1U	8 mm
PSEN ma1.3a-27/PSEN ma1.3-08/IX/VA/1U	8 mm

Contacts	Single connection	Connection to	LED	Connection type Cable/connector	Certification	Order number (unit) [1]
	◆	-	◆	5 m	EAC, TÜV, UL [2]	506220
		PSEN ix1	◆	5 m		506221
	◆	-	◆	10 m		506222
		PSEN ix1	◆	10 m		506223
	◆	-	◆	M8, 8-pin, pigtail, 20 cm		506226
	◆	PDP67	◆	M12, 5-pin, pigtail, 13 cm		506228
	◆	-	◆	M12, 8-pin, pigtail, 13 cm		506229
		PSEN ix1	◆	M8, 8-pin, pigtail, 20 cm		506227
	◆	-	◆	5 m		506230
		PSEN ix1	◆	5 m		506231
	◆	-	◆	10 m		506232
		PSEN ix1	◆	10 m		506233
	◆	-	◆	M8, 8-pin, pigtail, 20 cm		506236
	◆	PDP67	◆	M12, 5-pin, pigtail, 13 cm		506238
	◆	-	◆	M12, 8-pin, pigtail, 13 cm		506239
		PSEN ix1	◆	M8, 8-pin, pigtail, 20 cm		506237

N/C contact
N/O contact

[1] Unit comprising switch and actuator, which can also be ordered separately
[2] UL certification applies only to individual components contained within the set

Contacts	Single connection	Connection to	LED	ATEX	Connection type Cable/connector	Certification	Order number (unit) [1]
	◆	-	◆		Cable, 10 m	EAC, ECOLAB, TÜV, UL [2]	506242
		PSEN ix1	◆		Cable, 10 m		506243
	◆	-	◆		Cable, 5 m		506240
		PSEN ix1	◆		Cable, 5 m		506241

N/C contact
N/O contact

[1] Unit comprising switch and actuator, which can also be ordered separately
[2] UL certification applies only to individual components contained within the set

Cable selection:

From page 138

Keep up-to-date on magnetic safety switches PSENmag:

Webcode: web150413

Online information at www.pilz.com

Selection guide – PSENmag

Magnetic safety switch PSENmag – stainless steel

Common features

- Certified for applications up to PL e of EN ISO 13849-1 and SIL CL 3 of EN/IEC 62061 in conjunction with safety relays such as PNOZ s4, PNOZ X2.8P, PNOZ mB0
- Directions of actuation: 1
- Diagnostic interface: with and without LED
- Design: round
- Assured operating distance: 12 mm
- Protection type: IP67, IP69k
- Stainless steel housing
- Series connection: with PSEN ix1 or PDP67 F8 ION



PSEN ma1.3-20 M12/8/
PSEN ma1.3-08/VA/1U

Type (switch/actuator)	Assured switching distance
PSEN ma1.3b-24/ PSEN ma1.3-08/EX/VA/1U	8 mm
PSEN ma1.3b-28/ PSEN ma1.3-08/IX/EX/VA/1U	8 mm
PSEN ma1.3n-20/ PSEN ma1.3-08/VA/1U	8 mm
PSEN ma1.3-20 M12/8/ PSEN ma1.3-08/VA/1U	8 mm
PSEN ma1.3-22 M12/8/ PSEN ma1.3-08/IX/VA/1U	8 mm

Accessories – magnetic safety switch PSENmag

Description Type	Features	Quantity	Order number
One-way screw to secure the actuator	▸ Stainless steel ▸ Drive: one-way slot (safety screw)		
PSEN screw M4x10	▸ M4, 10 mm ▸ Suitable for PSEN ma1.4, PSEN x.1, PSEN ma1.1, PSEN ma2.1	10	540308
PSEN screw M4x12	▸ M4, 12 mm ▸ Suitable for PSEN ma1.4, PSEN x.1, PSEN ma1.1, PSEN ma2.1	10	540309
PSEN screw M4x16	▸ M4, 16 mm ▸ Suitable for PSEN ma1.4, PSEN x.1, PSEN ma1.1, PSEN ma2.1	10	540310
PSEN screw M4x20	▸ M4, 20 mm ▸ Suitable for PSEN ma1.4, PSEN x.1, PSEN ma1.1, PSEN ma2.1	10	540313
PSEN screw M4x26	▸ M4, 26 mm ▸ Suitable for PSEN ma1.4, PSEN x.1, PSEN ma1.1, PSEN ma2.1	10	540314

Contacts	Single connection	Connection to	LED	ATEX	Connection type Cable/connector	Certification	Order number (unit) [1]
1 N/C, 1 N/O	◆	-	◆	◆	Cable, 10 m	ATEX [2], EAC, TÜV, UL [3]	506254
1 N/C, 1 N/O		PSEN ix1	◆	◆	Cable, 10 m		506255
1 N/C, 1 N/O	◆	PDP67			Connector, M12, 5-pin	EAC, ECOLAB, TÜV, UL [3]	506246
1 N/C, 1 N/O, 1 N/C	◆	-			Connector, M12, 8-pin		506249
1 N/C, 1 N/O, 1 N/C		PSEN ix1			Connector, M12, 8-pin		506247

N/C contact
N/O contact

[1] Unit comprising switch and actuator, which can also be ordered separately
[2] ATEX certification applies only to individual components contained within the set
[3] UL certification applies only to individual components contained within the set



PSEN bracket



PSEN ma1.4 spacer

Description Type	Features	Quantity	Order number
End caps **PSEN cs3/cs4, PSEN ma1.4 actuator caps**	Suitable for PSEN ma1.4 actuator	50	540335
Mounting bracket **PSEN bracket**	Suitable for PSEN ma1.4, PSEN x.1 [4], PSEN ma1.1, PSEN ma2.1	1	532110
PSEN mag/cs bracket straight	Suitable for PSEN ma1.4, PSEN x.1, PSEN ma1.1, PSEN ma2.1	2	532111
Spacer **PSEN spacer**	Suitable for PSEN x.1 [4], PSEN ma1.1, PSEN ma2.1	10	534310
PSEN ma1.4 spacer	Suitable for PSEN ma1.4 [4]	10	534311
Reverse spacer **PSEN reverse spacer**	Suitable for PSEN x.1 [4], PSEN ma1.1, PSEN ma2.1	2	534320

[4] for actuator and switch, 1 of each required

Cable selection:

ab Seite 138

Keep up-to-date on magnetic safety switches PSENmag:

Webcode: web150413

Online information at www.pilz.com

Coded safety switch PSENcode

The non-contact, coded safety switch PSENcode is used both for monitoring the position of guards in accordance with EN 60947-5-3 and simple position monitoring.

IP67



PSEN cs5.11p



PSEN cs4.2p



PSEN cs1.1p



PSEN cs low profile actuator

Highest level of manipulation protection in the smallest space

With PSENcode you have the smallest coded safety switch with integrated evaluation and built-in manipulation protection, thanks to RFID technology.

The unique, fully coded version of PSENcode has the highest level of manipulation protection: the sensor will only accept a single actuator (key lock principle).

The coded PSENcode is accepted by other PSENcode actuators. The fully coded PSENcode only accepts one actuator. In contrast to the unique, fully coded safety switch, it's possible to teach-in a new actuator on the switch retrospectively.

The most low profile actuator on the market

Combine the PSENcode in the slimline or compact design with the PSEN cs low profile actuator. With its height of only 3 mm, it is perfectly suited for applications where space is at a premium.

Type code for PSENcode

PSEN cs2.13p

Product area Pilz **SEN**sors	Coding/design	Additional functions	Connection type
Product group **cs – PSENcode**	1.1 Coded, large design **2.1 Fully coded, large design** 2.2 Unique, fully coded, large design 3.1 Coded, compact design 4.1 Fully coded, compact design 4.2 Unique, fully coded, compact design 5.1 Coded, slimline design 6.1 Fully coded, slimline design 6.2 Unique, fully coded, slimline design	_ Without ATEX 1 With magnetic latching **3 With ATEX** 9 With max. 3 actuators	a Cable, 5 m [1] b Cable, 10 m [1] n Connector, M12, 5-pin **p Connector, M12, 8-pin (large design) [1]** **Connector, M8, 8-pin (compact, slimline design) [1]** M12 Connector, M12, 8-pin (compact, slimline design) [1]
Operation Non-contact, coded Transponder (RFID) With safe semiconductor outputs			

[1] Series connection integrated within the sensor, SDD-capable as of version 2.0

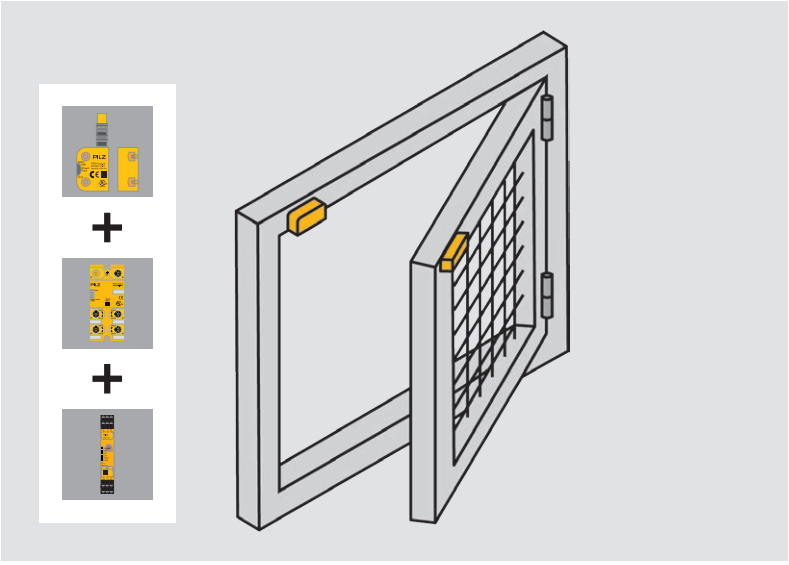

Components for your safe solution	Order number
Sensor: PSEN cs4.2 M12, 8-pin, 0.15 m/PSEN cs4.1	541209
Connection: PSEN cable, M12, 8-pin, straight, connector, M12, 8-pin, straight, connector, 5 m	540341
Decentralized periphery: PDP67 F 4 code	773603
Connection: PDP67 cable, M12, 8-pin, straight, connector, 30 m	380704
Evaluation device: PNOZ s3	751103

The optimum solution: monitoring swing door using the safety switch PSENcode and safety relay PNOZsigma.

Your benefits at a glance

- Highest level of safety and plant availability
- Highest manipulation protection offers maximum freedom in installation
- Simple project configuration, as the unit is highly versatile:
  - Insensitive to shock and vibration
  - Can be used with heavy soiling and strict cleaning requirements of IP67/IP6K9K
  - Flexible installation
- Economical:
  - Space-saving installation due to the compact housing
  - Highest level of safety even when connected in series with PSENcode, PSENslock and PSENsgate

SDD
SAFETY DEVICE DIAGNOSTICS

Simple implementation saves time and money

Thanks to integrated evaluation and standard interfaces, PSENcode is open to products from other manufacturers. It fits perfectly into your environment and can be used to upgrade your plant.

Fewer service calls, greater availability

High machine availability is achieved thanks to fast fault diagnostics with Safety Device Diagnostics (see page 14).



High flexibility due to multiple actuation directions (PSEN cs1/PSEN cs5), multiple mounting directions (PSEN cs3/PSEN cs5) for the actuators and compact/slimline design (PSEN cs3/PSEN cs5).

Keep up-to-date on coded safety switches PSENcode:

Webcode: web150412

Online information at www.pilz.com

Selection guide – PSENcode

Coded safety switch PSENcode with 8-pin connector and integrated series connection, SDD-capable

Energy saving by Pilz

Common features

- Safety switch for monitoring the position of movable guards
- Certified for applications up to PL e of EN ISO 13849-1, up to SIL CL 3 of EN/IEC 62061
- Integrated evaluation and standard interfaces (OSSD) for connection to evaluation devices from Pilz or other manufacturers
- Series connection with PSENcode, PSENslock and PSENsgate approved up to PL e of EN ISO 13849-1, up to SIL CL 3 of EN/IEC 62061
- Protection type:
  - Cable version: IP6K9K
  - Connector version: IP67
- Diagnostic interface with 3 LEDs
- Outputs: 2 safety outputs and 1 signal output
- Drill hole spacing:
  - PSEN cs3/PSEN cs4: 22 mm
  - PSEN cs5/PSEN cs6: 22 mm
- Typical operating distance:
  - PSEN cs1/PSEN cs2: 21 mm
  - PSEN cs3/PSEN cs4: 11 mm
  - PSEN cs5/PSEN cs6: 11 mm, 5 mm, 9 mm (M8 connector) or 6 mm (M12 connector)
- Magnetic latching PSEN cs5.11/ PSEN cs6.11/PSEN cs6.21: 30 N



PSEN cs1.1p



PSEN cs4.2p



PSEN cs5.11

Type (switch)	Type of coding
Large design	
PSEN cs1.1p	Coded [2]
PSEN cs1.13p	Coded [2]
PSEN cs2.1p	Fully coded [3]
PSEN cs2.13p	Fully coded [3]
PSEN cs2.2p	Unique, fully coded [4]
Compact design	
PSEN cs3.1 M12/8-0.15m	Coded [2]
PSEN cs3.1 M12/8-1.5m	Coded [2]
PSEN cs3.1a	Coded [2]
PSEN cs3.1b	Coded [2]
PSEN cs3.1p	Coded [2]
PSEN cs4.1 M12/8-0.15m	Fully coded [3]
PSEN cs4.1a	Fully coded [3]
PSEN cs4.1b	Fully coded [3]
PSEN cs4.1p	Fully coded [3]
PSEN cs4.2 M12/8-0.15m	Unique, fully coded [4]
PSEN cs4.2a	Unique, fully coded [4]
PSEN cs4.2p	Unique, fully coded [4]
Slimline design	
PSEN cs5.1 M12/8	Coded [2]
PSEN cs5.1p	Coded [2]
PSEN cs5.11 M12/8	Coded [2]
PSEN cs5.13 M12/8	Coded [2]
PSEN cs6.1 M12/8	Fully coded [3]
PSEN cs6.1p	Fully coded [3]
PSEN cs6.11 M12/8	Fully coded [3]
PSEN cs6.2 M12/8	Unique, fully coded [4]
PSEN cs6.2p	Unique, fully coded [4]
PSEN cs6.21 M12/8	Unique, fully coded [4]

Additional functions	Suitable actuator	Connection type	Certification	Order number	
				Switch	Unit [1]
-	540 080	Connector, M12, 8-pin	EAC, FCC [5], IC [5], TÜV, UL [5]	540 050	540 000
With ATEX	540 080	Connector, M12, 8-pin	ATEX [6], EAC, electrosuisse, FCC [5], IC [5], TÜV, UL [5],	-	540 005
-	540 180	Connector, M12, 8-pin	EAC, FCC [5], IC [5], TÜV, UL [5]	540 150	540 100
With ATEX	540 180	Connector, M12, 8-pin	ATEX [6], EAC, electrosuisse, FCC [5], IC [5], TÜV, UL [5],	-	540 105
-	540 180	Connector, M12, 8-pin	EAC, FCC [5], IC [5], TÜV, UL [5]	-	540 200
-	541 080, 540 080	Connector, M12, 8-pin, pigtail, 16 cm	EAC, FCC [5], IC [5], TÜV, UL [5]	541 059	541 009
-	541 080, 540 080	Connector, M12, 8-pin, pigtail, 1.5 m	EAC, FCC [5], IC [5], TÜV, UL [5]	541 064	541 014
-	541 080, 540 080	Cable, 5 m	EAC, FCC [5], IC [5], TÜV, UL [5]	541 061	541 011
-	541 080, 540 080	Cable, 10 m	EAC, FCC [5], IC [5], TÜV, UL [5]	541 062	541 012
-	541 080, 540 080	Connector, M8, 8-pin	EAC, FCC [5], IC [5], TÜV, UL [5]	541 060	541 010
-	541 180, 540 180	Connector, M12, 8-pin, pigtail, 16 cm	EAC, FCC [5], IC [5], TÜV, UL [5]	541 159	541 109
-	541 180, 540 180	Cable, 5 m	EAC, FCC [5], IC [5], TÜV, UL [5]	541 161	541 111
-	541 180, 540 180	Cable, 10 m	EAC, FCC [5], IC [5], TÜV, UL [5]	541 162	541 112
-	541 180, 540 180	Connector, M8, 8-pin, pigtail, 14 cm	EAC, FCC [5], IC [5], TÜV, UL [5]	541 160	541 110
-	541 180, 540 180	Connector, M12, 8-pin, pigtail, 16 cm	EAC, FCC [5], IC [5], TÜV, UL [5]	541 259	541 209
-	541 180, 540 180	Cable, 5 m	EAC, FCC [5], IC [5], TÜV, UL [5]	541 261	541 211
-	541 180, 540 180	Connector, M8, 8-pin, pigtail, 14 cm	EAC, FCC [5], IC [5], TÜV, UL [5]	541 260	541 210
-	542 083	Connector, M12, 8-pin	EAC, FCC [5], IC [5], TÜV, UL [5]	542 059	542 009
-	542 080	Connector, M8, 8-pin	EAC, FCC [5], IC [5], TÜV, UL [5]	542 050	542 000
Magnetic latching	542 081	Connector, M12, 8-pin	EAC, FCC [5], IC [5], TÜV, UL [5]	542 051	542 011
With ATEX	542 085	Connector, M12, 8-pin	ATEX [6], EAC, electrosuisse, FCC [5], IC [5], TÜV, UL [5],	542 055	542 005
-	542 183	Connector, M12, 8-pin	EAC, FCC [5], IC [5], TÜV, UL [5]	542 159	542 109
-	542 180	Connector, M8, 8-pin	EAC, FCC [5], IC [5], TÜV, UL [5]	542 150	542 100
Magnetic latching	542 181	Connector, M12, 8-pin	EAC, FCC [5], IC [5], TÜV, UL [5]	542 151	542 111
-	542 183	Connector, M12, 8-pin	EAC, FCC [5], IC [5], TÜV, UL [5]	542 259	542 209
-	542 180	Connector, M8, 8-pin	EAC, FCC [5], IC [5], TÜV, UL [5]	542 250	542 200
Magnetic latching	542 181	Connector, M12, 8-pin	EAC, FCC [5], IC [5], TÜV, UL [5]	542 251	542 211

[1] Unit comprising switch and actuator [2] Coded = switch accepts any PSENcode actuator
[3] Fully coded = switch accepts only one PSENcode actuator, teach-in up to 8 times
[4] Unique, fully coded = switch accepts only one PSENcode actuator, no teach-in facility
[5] FCC, IC and UL certification applies only to individual components contained within the set
[6] ATEX certification applies only to individual components contained within the set

Cable selection:

From page 138

Keep up-to-date on coded safety switches PSENcode:

Webcode: web150412

Online information at www.pilz.com

Selection guide – PSENcode

Coded safety switch PSENcode with 5-pin connection for PDP67 F 8DI ION

Energy saving by Pilz

Common features

- Safety switch for monitoring the position of movable guards
- Certified for applications up to PL e of EN ISO 13849-1, up to SIL CL 3 of EN/IEC 62061
- Integrated evaluation and standard interfaces (OSSD) for connection to evaluation devices from Pilz or other manufacturers
- Series connection with PSENcode, PSENslock and PSENsgate approved up to PL e of EN ISO 13849-1, up to SIL CL 3 of EN/IEC 62061
- Protection type:
  - Cable version: IP6K9K
  - Connector version: IP67
- Diagnostic interface with 3 LEDs
- Outputs: 2 safety outputs and 1 signal output
- Drill hole spacing:
  - PSEN cs3/PSEN cs4: 22 mm
  - PSEN cs5/PSEN cs6: 22 mm
- Typical operating distance:
  - PSEN cs1/PSEN cs2: 21 mm
  - PSEN cs3/PSEN cs4: 11 mm
  - PSEN cs5/PSEN cs6: 11 mm, 5 mm, 9 mm (M8 connector) or 6 mm (M12 connector)
- Magnetic latching PSEN cs5.11/ PSEN cs6.11/PSEN cs6.21: 30 N



PSEN cs1.1n



PSEN cs3.1n



PSEN cs5.1n

Type (switch)	Type of coding
Large design	
PSEN cs1.1n	Coded [2]
PSEN cs2.1n	Fully coded [3]
PSEN cs2.2n	Unique, fully coded [4]
Compact design	
PSEN cs3.1n	Coded [2]
PSEN cs4.1n	Fully coded [3]
PSEN cs4.2n	Unique, fully coded [4]
Slimline design	
PSEN cs5.1n	Coded [2]
PSEN cs6.1n	Fully coded [3]
PSEN cs6.2n	Unique, fully coded [4]
PSEN cs5.11n	Coded [2]
PSEN cs6.11n	Fully coded [3]
PSEN cs6.21n	Unique, fully coded [4]

Additional functions	Suitable actuator	Connection type	Certification	Order number	
				Switch	Unit [1]
-	540080	Connector, M12, 5-pin	EAC, FCC [5], IC [5], TÜV, UL [5]	540053	540003
-	540180	Connector, M12, 5-pin	EAC, FCC [5], IC [5], TÜV, UL [5]	540153	540103
-	540180	Connector, M12, 5-pin	EAC, FCC [5], IC [5], TÜV, UL [5]	540253	540203
-	541080, 540080	Connector, M12, 5-pin, pigtail, 16 cm	EAC, FCC [5], IC [5], TÜV, UL [5]	541053	541003
-	541180, 540180	Connector, M12, 5-pin, pigtail, 16 cm	EAC, FCC [5], IC [5], TÜV, UL [5]	541153	541103
-	541180, 540181	Connector, M12, 5-pin, pigtail, 16 cm	EAC, FCC [5], IC [5], TÜV, UL [5]	541253	541203
-	542083	Connector, M12, 5-pin	EAC, FCC [5], IC [5], TÜV, UL [5]	542053	542003
-	542183	Connector, M12, 5-pin	EAC, FCC [5], IC [5], TÜV, UL [5]	542153	542103
-	542183	Connector, M12, 5-pin	EAC, FCC [5], IC [5], TÜV, UL [5]	542253	542203
Magnetic latching	542081	Connector, M12, 5-pin	EAC, FCC [5], IC [5], TÜV, UL [5]	542063	542013
Magnetic latching	542181	Connector, M12, 5-pin	EAC, FCC [5], IC [5], TÜV, UL [5]	542163	542113
Magnetic latching	542181	Connector, M12, 5-pin	EAC, FCC [5], IC [5], TÜV, UL [5]	542263	542213

[1] Unit comprising switch and actuator [2] Coded = switch accepts any PSENcode actuator
[3] Fully coded = switch accepts only one PSENcode actuator, teach-in up to 8 times
[4] Unique, fully coded = switch accepts only one PSENcode actuator, no teach-in facility
[5] FCC, IC and UL certification applies only to individual components contained within the set

Cable selection:

From page 138

Keep up-to-date on coded safety switches PSENcode:

Webcode: web150412

Online information at www.pilz.com

Selection guide – PSENcode

Actuator for coded safety switch PSENcode

Energy saving by Pilz



PSEN cs1.1



PSEN cs3.1



PSEN cs5.11



PSEN cs5.1 low profile glue 1 actuator



PSEN cs5.1 low profile screw 1 actuator

Type (actuator)	Additional functions	Certification	Order number Actuator
▸ Large design			
PSEN cs1.1	-	TÜV, EAC, UL	540080
PSEN cs2.1	-	TÜV, EAC, UL	540180
▸ Compact design			
PSEN cs3.1	-	TÜV, EAC, UL	541080
PSEN cs4.1	-	TÜV, EAC, UL	541180
▸ Slimline design			
PSEN cs5.1	-	TÜV, EAC, UL	542080
PSEN cs5.1 M12	-	TÜV, EAC, UL	542083
PSEN cs5.11 M12	Magnetic latching	TÜV, EAC, UL	542081
PSEN cs5.13	For ATEX applications	TÜV, EAC, UL	542085
PSEN cs6.1	-	TÜV, EAC, UL	542180
PSEN cs6.1 M12	-	TÜV, EAC, UL	542183
PSEN cs6.11 M12	Magnetic latching	TÜV, EAC, UL	542181

Type	Features	Order number
PSEN cs5.1 low profile glue 1 actuator	Stick-on actuator, coded, height: 3 mm, switching distance: 6 mm, for use with PSENcode slimline design	542087
PSEN cs5.1 low profile screw 1 actuator	Screw-on actuator, coded, height: 3 mm, switching distance: 6 mm, for use with PSENcode slimline design	542088
PSEN cs6.1 low profile glue 1 actuator	Stick-on actuator, fully coded, height: 3 mm, switching distance: 6 mm, for use with PSENcode slimline design	542187
PSEN cs6.1 low profile screw 1 actuator	Screw-on actuator, fully coded, height: 3 mm, switching distance: 6 mm, for use with PSENcode slimline design	542188
PSEN cs3.1 low profile glue 1 actuator	Stick-on actuator, coded, height: 3 mm, switching distance: 6 mm, for use with PSENcode compact design	541087
PSEN cs3.1 low profile screw 1 actuator	Screw-on actuator, coded, height: 3 mm, switching distance: 6 mm, for use with PSENcode compact design	541088
PSEN cs4.1 low profile glue 1 actuator	Stick-on actuator, fully coded, height: 3 mm, switching distance: 6 mm, for use with PSENcode compact design	541187
PSEN cs4.1 low profile screw 1 actuator	Screw-on actuator, fully coded, height: 3 mm, switching distance: 6 mm, for use with PSENcode compact design	541188

Accessories – coded safety switch PSENcode



PSEN cs3/cs4, PSEN ma1.4 actuator caps



PSEN cs bracket stop swinging door

Description Type	Features	Quantity	Order number
One-way screw to secure the actuator	▸ Stainless steel ▸ Drive: one-way slot (safety screw)		
PSEN screw M4x10	▸ M4, 10 mm ▸ Suitable for PSEN cs3/4/5/6	10	540308
PSEN screw M4x12	▸ M4, 12 mm ▸ Suitable for PSEN cs3/4/5/6	10	540309
PSEN screw M4x16	▸ M4, 16 mm ▸ Suitable for PSEN cs3/4/5/6	10	540310
PSEN screw M4x20	▸ M4, 20 mm ▸ Suitable for PSEN cs3/4/5/6	10	540313
PSEN screw M4x26	▸ M4, 26 mm ▸ Suitable for PSEN cs3/4/5/6	10	540314
PSEN screw M5x10	▸ M5, 10 mm ▸ Suitable for PSEN cs1/2	10	540311
PSEN screw M5x20	▸ M5, 20 mm ▸ Suitable for PSEN cs1/2	10	540312
End caps **PSEN cs3/cs4, PSEN ma1.4 actuator caps**	Suitable for PSEN cs3/4 actuator	50	540335
Mounting bracket **PSEN bracket**	Suitable for PSEN cs3/4 [1]	1	532110
PSEN mag/cs bracket straight	Suitable for PSEN cs3/4/5/6	2	532111
PSEN cs bracket stop swinging door	Suitable for PSEN cs5/6 (set for switch and actuator)	1	532108
PSEN cs bracket stop sliding door	Suitable for PSEN cs5/6 (set for switch and actuator)	1	532109

[1] for actuator and switch, 1 of each required

Cable selection:

From page 138

Keep up-to-date on coded safety switches PSENcode:

Webcode: web150412

Online information at www.pilz.com

Coded safety switch PSENcode for position moni

Three positions – one safe sensor: one coded safety switch type is suitable for monitoring up to three positions safely. In this economical solution, PSENcode also distinguishes safely between positions.

IP67

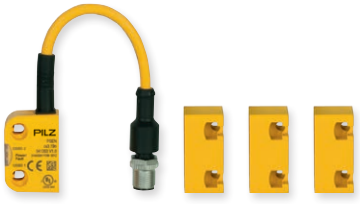

PSEN cs3.19n



PSEN cs1.19n

The coded safety switch PSEN csx.19n enables quick, user-friendly diagnostics via LED display, whether you use the compact or the large design. Thanks to the connection type (M12 connector, 5-pin), the new PSENcode fits perfectly into any system environment.

Solution for standard and safety

Previously, two standard proximity switches and one safe sensor were necessary to monitor three positions within an application. The coded safety switch PSEN csx.19n enables a more efficient solution because it can replace two standard sensors. The coded safety switch PSENcode simplifies the application considerably. Actuator arms, sensor wiring and I/O channels are surplus to requirements, as are proximity switches. As a result you can reduce the costs and effort involved in standard and safety-related position detection.



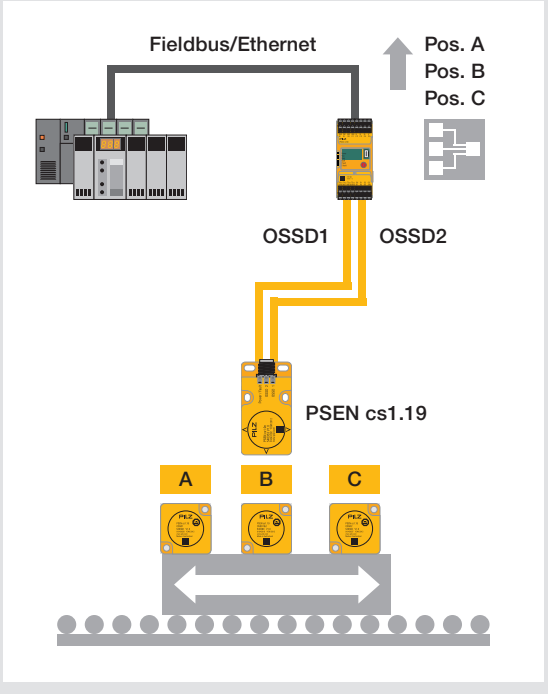

PSENcode offers great potential savings as a solution for safety and automation.

toring

Selection guide – coded safety switch PSENcode – Sets

Common features

- Mode of operation: RFID transponder technology
- Type of coding: coded
- Diagnostic interface: 3 LEDs (active actuator, supply voltage/fault)
- Connection: connector, M12, 5-pin
- Design: compact or large
- Outputs: 2 safety outputs
- Inputs: 2 safety inputs
- Protection type: IP67
- Typical operating distance:
  - PSEN cs1.19n/PSEN cs1.19: 15 mm
  - PSEN cs3.19n/PSEN cs3.19: 11 mm

Type (switch/ actuator)	Certi-fication	Order number (Unit)		
		Sensor with 3 actuators (OSSD 1, OSSD 2, OSSD 1&2)	Sensor with 2 actuators (OSSD 1, OSSD 2)	Sensor with 1 actuator (OSSD 1&2)
▸ **Large design**				
PSEN cs1.19n/ PSEN cs1.19	EAC, FCC [1], IC [1], TÜV, UL [1]	540303	540305	540304
▸ **Compact design**				
PSEN cs3.19n/ PSEN cs3.19	EAC, FCC [1], IC [1], TÜV, UL [1]	541303	541305	541304

[1] FCC, IC and UL certification applies only to individual components contained within the set

Selection guide – coded safety switch PSENcode



PSEN cs3.19n – 1switch

Type	Certification	Order number
PSEN cs1.19n – 1switch	EAC, FCC [1], IC [1], TÜV, UL [1]	540353
PSEN cs1.19 – OSSD 1&2 – 1actuator	EAC, TÜV, UL [1]	540380
PSEN cs1.19 – OSSD 1 – 1actuator	EAC, TÜV, UL [1]	540382
PSEN cs1.19 – OSSD 2 – 1actuator	EAC, TÜV, UL [1]	540383
PSEN cs3.19n – 1switch	EAC, FCC [1], IC [1], TÜV, UL [1]	541353
PSEN cs3.19 – OSSD 1&2 – 1actuator	EAC, TÜV, UL [1]	541380
PSEN cs3.19 – OSSD 1 – 1actuator	EAC, TÜV, UL [1]	541382
PSEN cs3.19 – OSSD 2 – 1actuator	EAC, TÜV, UL [1]	541383

[1] FCC, IC and UL certification applies only to individual components contained within the set

Achievable safety level in accordance with EN ISO 13849-1 (per actuator)

Actuator used	OSSD 1&2	OSSD 1	OSSD 2
OSSD 1&2	PL e	-	-
OSSD 1, OSSD 2	-	PL d [2]	PL d [2]
OSSD 1&2, OSSD 1, OSSD 2	PL d [2]	PL c	PL c

[2] With additional diagnostics, stuck-at-faults and wiring errors such as short circuits and shorts across contacts are detected (plausibility check).

Keep up-to-date on coded safety switches PSENcode:

Webcode: web150412

Online information at www.pilz.com

Safety bolt PSENbolt

In conjunction with Pilz safe control technology, the safety bolt PSENbolt offers you the safe, complete solution comprising safety switch, handle and bolt. This removes the need for expensive in-house engineering.

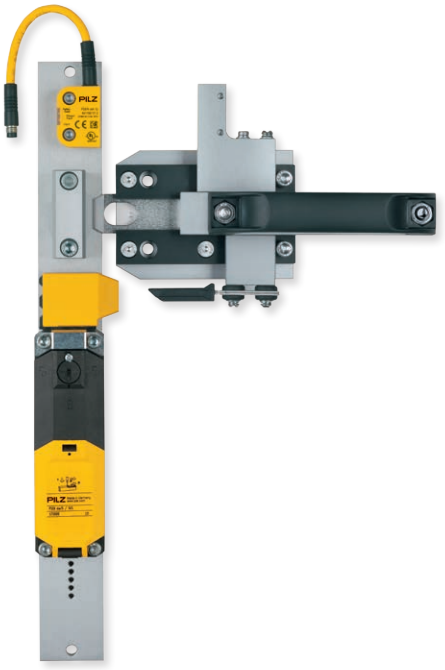

PSEN b5 (with PSEN cs4/PSEN me1)

The combinable solution for safety gate monitoring
PSENbolt is particularly suitable for safety gates that are difficult to adjust or in areas where safety gates are opened and closed frequently, because as well as protection against defeat and manipulation protection, long life of the material is also guaranteed.

Longer service life for the integrated safety switch
The actuator is guided into the actuator head of the safety switch PSEN me1 mechanically. This guarantees that the actuator is inserted correctly into the safety switch when the guard is closed. At the same time it provides mechanical protection for the switch.

As a combination of two safety switches, the safety bolt PSENbolt enables secure safety gate monitoring with the coded safety switch PSENcode up to the highest category PL e of EN ISO 13849-1 / SIL CL 3 of EN/IEC 62061 and safe guard locking with the mechanical safety switch PSENmech in one.

Type code for PSENbolt

PSEN b4.1

Product area **P**ilz **SEN**sors	**Escape release/locking pin**		**Can be combined with**
Product group **b – PSENbolt**	1	Without escape release, without locking pin	▸ Mechanical safety switches PSENmech with guard locking (PSEN me1 series) ▸ Non-contact, coded safety switches PSENcode (series PSEN cs1, PSEN cs2)
Operation Depends on the selected safety switch: ▸ Mechanical ▸ Magnetic ▸ Coded	2	With escape release, with locking pin, can be deactivated	
	2.1	With escape release, with locking pin, cannot be deactivated	
	3	Without escape release, without locking pin	▸ Non-contact, coded safety switches PSENcode (series PSEN cs3, PSEN cs4)
	4	With escape release, with locking pin, can be deactivated	
	4.1	**With escape release, with locking pin, cannot be deactivated**	
	5	Without escape release, without locking pin	▸ Mechanical safety switch PSEN me1 and non-contact, coded safety switches PSENcode (PSEN cs3, PSEN cs4)

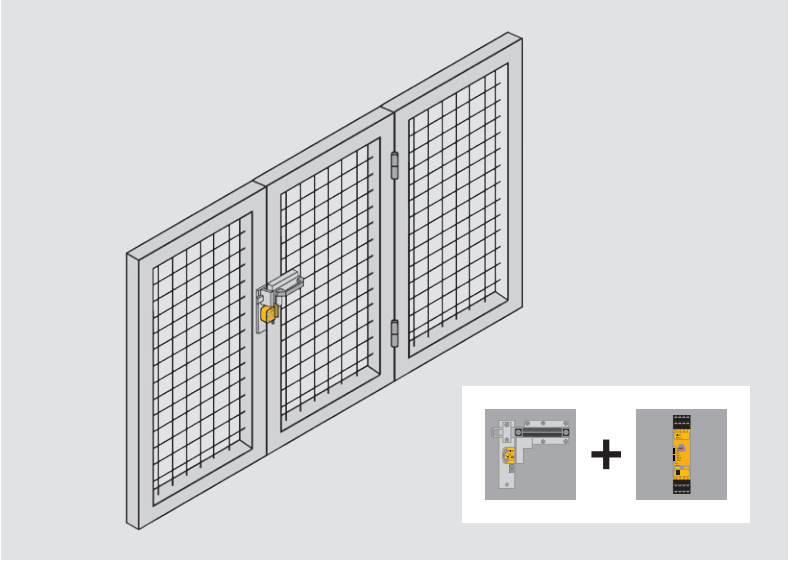

Components for your safe solution	Order number
Sensor: PSEN b4.1 combined with PSEN cs4.1n/PSEN cs4.1	540041 541103
Connection: PSEN cable, M12, 5-pin, 5 m	630311
Evaluation device: PNOZ s4	751104

The optimum solution: monitoring swing gates using the safety bolt PSENbolt with PSENcode and safety relay PNOZsigma.

Your benefits at a glance

- Reduced development and installation expense
- Cost-optimized solution comprising safety switch, handle and bolt:
  - Simple combination of up to 2 switches
  - Long-lasting thanks to mechanical protection for safety switch
  - Reduced installation work thanks to the terminal that secures the cable (PSEN b5)
  - Highest manipulation protection and protection against defeat with safety switches PSENcode (RFID)
- Escape release available as an option
- High availability: locking pin protects the bolt from closing unintentionally

Selection guide – safety bolt PSENbolt



PSEN b1



PSEN b3

Type	Can be combined with	Escape release	Locking pin	Order number[1]
PSEN b1	▸ PSEN me1 ▸ PSEN cs1 ▸ PSEN cs2			540010
PSEN b2		◆	◆[2]	540020
PSEN b2.1		◆	◆[3]	540021
PSEN b3	▸ PSEN cs3 ▸ PSEN cs4			540030
PSEN b4		◆	◆[2]	540040
PSEN b4.1		◆	◆[3]	540041
PSEN b5	▸ PSEN me1 ▸ PSEN cs3 ▸ PSEN cs4			540015

[1] Order number for handle and bolt
[2] Can be deactivated
[3] Cannot be deactivated

Approvals depend on the selected safety switch.

Cable selection:

From page 138

Keep up-to-date on safety bolts PSENbolt:

Webcode: web150411

Online information at www.pilz.com

Safe hinge switch PSENhinge

Safe hinge switches PSENhinge provide a safe, complete solution for guards, comprising hinge and safety switch. Enjoy the benefits of a safe, complete solution in conjunction with Pilz control technology.



PSEN hs1.1p

For guards

PSENhinge is suitable for rotatable and hinged gates as well as flaps. High manipulation protection is achieved by concealing the installation within the guard. Safe hinge switches from Pilz can also be used where there is heavy soiling, as they conform to protection type IP67.

With re-adjustable switching point

Designed as one functional and installation unit, PSENhinge offer a high level of flexibility in installation, connection and adjustment. They allow systems to be attached to the right or left, for optimum cable feed at a switching point between 0° and 270°. Even after setting the switching point, the user can still correct the setting of the hinge with the integrated precision adjustment system.

Maximum flexibility

The change kit can be used to redefine the switching point when the plant is upgraded.

Type code for PSENhinge

PSEN hs1.1p

Product area Pilz **SEN**sors	Contacts	Door stop	Connection
Product group **hs – PSENhinge**	**1 N/C / N/C**	**1 Right** 2 Left	**p Connector, M12, 4-pin** (compatible with M12, 5-pin)
Operation Mechanical			

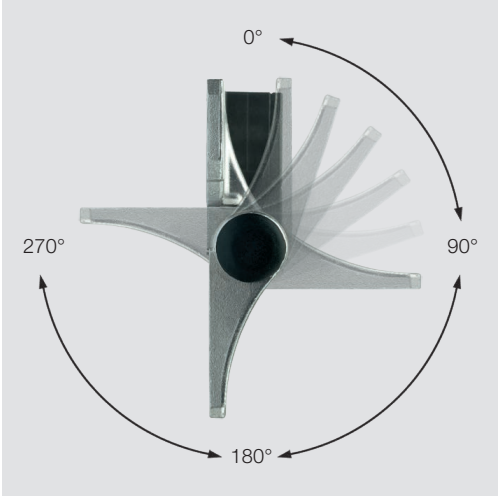

High level of flexibility for the design: the switching point on PSENhinge can be set between 0° and 270°.

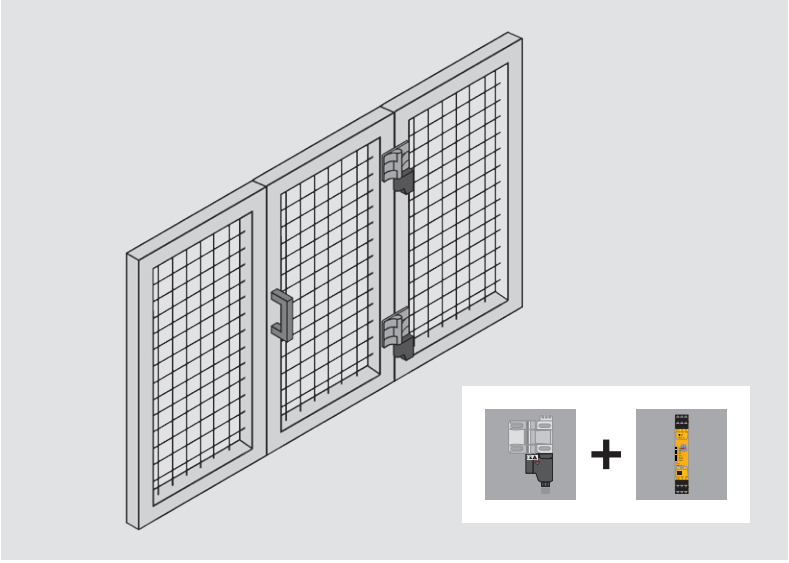

Components for your safe solution	Order number
Sensor: PSEN hs1.1p	570270
Connection: PSEN cable, M12, 4-pin, 5 m	630301
Evaluation device: PNOZ s3	751103

The optimum solution: monitoring swing gates safely using the hinge switches PSENhinge and safety relay PNOZsigma.

Selection guide – safe hinge switch PSENhinge

Type	Door stop	Certification	Order number[1)]
PSEN hs1.1p	Right	CSA, DGUV	570270
PSEN hs1.2p	Left	CSA, DGUV	570271

[1)] Order number for hinge and safety switch

Common features

- Hinge switches for monitoring the position of movable guards in accordance with EN 60947-5-3
- Can be used in applications up to PL e of EN ISO 13849-1, SIL CL 3 of EN/IEC 62061 if 2 switches are used
- Connection type: Connector, M12, 4-pin
- Contacts: 2 N/C
- Protection type: IP67
- Plastic-bodied design

Accessories – PSENhinge

Description Type	Features	Quantity	Order number
Empty hinge **PSEN hs1 hinge**	Stainless steel	1	570280
Change kit **PSEN hs kit1**	To re-adjust the switching point	1	570281

Your benefits at a glance

- Safe, complete solution for rotatable/hinged guards, comprising hinge and safety switch
- In conjunction with Pilz controllers, can be used for applications with high safety requirements
- Manipulation-proof and space-saving, as it's integrated directly within the safeguard
- Highest flexibility in installation, connection and adjustment:
  - Switching point is free to set from 0° to 270° and is re-adjustable
  - Protection type IP67
- User-friendly:
  - Slot fastening for mounting on profiles
  - Simple readjustment by means of integrated precision adjustment system
  - For right and left hinged systems
- Low maintenance:
  - Rugged version for high mechanical loads
  - Resistant to soiling

Cable selection:
From page 138

Keep up-to-date on safe hinge switches PSENhinge:

Webcode: web150410

Online information at www.pilz.com

Modular safety gate system

The modular safety gate system offers you an individual safety gate solution that is ideally tailored to your application. That means you can combine individual components flexibly to suit your own particular requirements. Simply customize your safety gate monitoring system with our optional economical series connection, rapid diagnostics, additional operating and pushbutton elements, escape releases and door handles.



PSENslock



PSENmlock



Safety Device Diagnostics (SDD)



PITgatebox

The heart of the modular safety gate system: the safety gate sensors PSENslock and PSENmlock
Achieve safe position monitoring with process guarding with the safety gate sensor PSENslock. It can be used up to the highest category and in series connection.

The safety gate sensor PSENmlock offers safe interlocking and safe guard locking up to PL e. Connect PSENmlock in series and benefit from a low-cost installation. In combination with Safety Device Diagnostics (SDD), individual switches or gates can be controlled in a targeted manner – and all this without expensive individual wiring in the control cabinet. In addition you also achieve simple and comprehensive diagnostics of the safety switches, reducing downtimes. As an optional accessory, two versions of escape release can be combined with PSENmlock: a bar is used to connect the PSEN ml escape release directly to the base unit, while the remote PSEN ml escape release cordset is mounted on the PSENmlock via a pull-push wire. Whether it's for a swing gate or sliding gate: we also offer you the right handle (further information from page 56).

Modular safety gate system

	PSENslock (process guarding)		PSENmlock (safe guard locking)		
Sensor	Series connection, 500 N 	Series connection, 1 000 N 	Base version 	Series connection 	Optional: SDD 
Escape release			Escape release 	Remote escape release 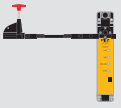	
Handles			For swing gates 	For sliding gates 	
Pushbutton unit	PITgatebox    				

SDD
SAFETY DEVICE DIAGNOSTICS

Safety gate systems

The perfect partner: simple operation with the pushbutton unit PITgatebox

Each preconfigured version with various combinations of pushbuttons, key switches and E-STOP pushbuttons gives you maximum flexibility for your individual application. Thanks to the slimline design, the robust control unit can be installed quickly and easily on standard profile systems. Combine the pushbutton unit PITgatebox with the safety gate systems PSENmlock and PSENslock.

When combined with our safe control technology, you receive a one-stop modular safety gate solution tailored to your particular needs.

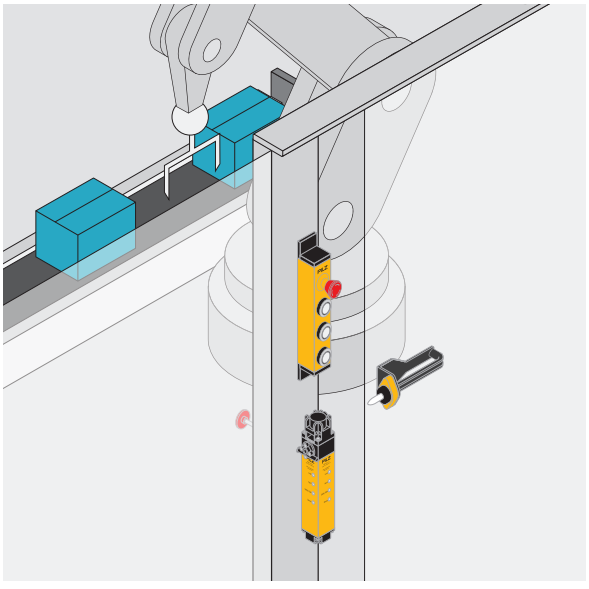

Keep up-to-date on safety gate systems:

Webcode: web150524

Online information at www.pilz.com

Safety gate system PSENslock

The safety gate system PSENslock offers secure safety gate monitoring based on the non-contact, coded safety switch with electromagnetic process guarding of 500 N or 1 000 N (BG GS-ET 19).



PSEN sl-0.5p



PSEN sl-1.0p ... VA

Stringent protection of human and machine

PSENslock is a safe alternative to existing mechanical technology for safety gate monitoring. Highest possible manipulation protection and low wear and tear ensure a long service life and protect your investment. Combined with Pilz control technology, you receive a safe, complete solution for guard monitoring.

Whether separately or in series, PSENslock is configured for the highest categories in safety gate monitoring.

Save time and costs during commissioning

Thanks to its different assembly directions, PSENslock can be installed and commissioned quickly and easily. It is optimized for mounting on the popular 45 mm profiles.

With the free-moving anchor plate (free moving actuator), even gates requiring high tolerances can be monitored and locked.

Type code for PSENslock

PSEN sl-1.0fm p 2.2

Product area Pilz **SEN**sors	Magnetic force	Actuator	Connection	Coding/Firmware	Material
Product group **sl – PSENslock**	0.5 500 N **1.0 1 000 N**	**fm Free moving**	**p Connector, M12, 8-pin (series connection integrated in sensor)** n Connector, M12, 5-pin	1.1 Basic software, coded 2.1 Basic software, fully coded **2.2 Basic software, unique, fully coded** 3.1 OSSDs independent of guard locking, coded 4.1 OSSDs independent of guard locking, fully coded 4.2 OSSDs independent of guard locking, unique, fully coded 6.1 Extended diagnostic functions, fully coded	VA With stainless steel elements - Base plate - Connector
Operation ▸ Non-contact, coded ▸ Transponder (RFID) ▸ With safe semiconductor outputs					

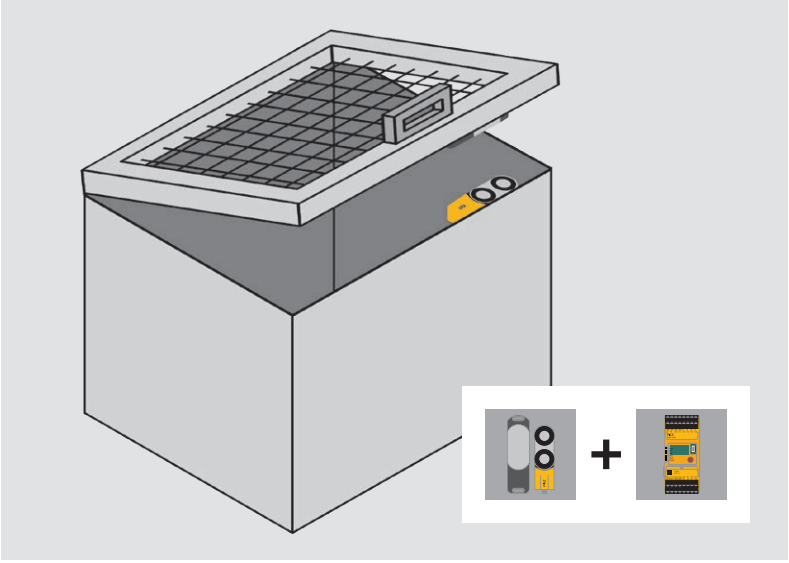

Components for your safe solution	Order number
Sensor: PSEN sl-1.0p 2.2/PSEN sl-1.0	570602
Connection: PSEN cable, M12, 8-pin, 5 m	540320
Evaluation device: PNOZ m B0 - Spring loaded terminals (1 set)	772100 751008

The optimum solution: guard locking on the flap using the safety gate system PSENslock, evaluated using the configurable safe small controllers PNOZmulti 2.

Your benefits at a glance

- Secure safety gate monitoring for the highest safety requirements
- High availability for your plant:
  - Highest level of manipulation protection (coding)
  - Process protection via magnetic guard locking
- Rapid commissioning:
  - 4 assembly directions
  - Tolerant to gate misalignment
  - Flexible connection via connector
- User-friendly diagnostics via double-sided LED display
- Saves power, as the magnet on PSENslock is optimized for energy efficiency



PSENslock with free-moving anchor plate (free-moving actuator)





Keep up-to-date on safety gate systems PSENslock:

Webcode: web150408

Online information at www.pilz.com

Selection guide – PSENslock

Safety gate system PSENslock with 8-pin connector

Common features

- Safety gate systems for monitoring the position of movable guards in accordance with EN 60947-5-3
- Suitable for applications up to PL e of EN ISO 13849-1, SIL CL 3 of EN/IEC 62061 with magnetic guard locking for process protection tasks
- Series connection up to PL e of EN ISO 13849-1:
  - PSENcode, PSENslock with 5-pin connection for decentralized module PDP67 F8 DI ION
  - PSENslock and Pilz sensor technology with 8-pin connection for passive junction PDP67 F 4 code or PSEN Y junction (cable separator)
- Electrical data:
  - Supply voltage: 24 VDC
  - Voltage tolerance: –15 … + 10 %
  - Outputs: 2 safety outputs and 1 signal output
- Mechanical data:
  - Vertical and lateral offset: +/– 3 or +/– 5 mm
  - Protection type: IP67



PSEN sl-0.5



PSEN sl-0.5 … fm



PSEN sl-1.0p 1.1 VA/ PSEN sl-1.0

Type (switch/actuator)	Holding force
PSEN sl-0.5p 1.1/PSEN sl-0.5	500 N
PSEN sl-0.5p 1.1/PSEN sl-0.5fm [3]	500 N
PSEN sl-0.5p 2.1/PSEN sl-0.5	500 N
PSEN sl-0.5p 2.1/PSEN sl-0.5fm [3]	500 N
PSEN sl-0.5p 2.2/PSEN sl-0.5	500 N
PSEN sl-0.5p 2.2/PSEN sl-0.5fm [3]	500 N
PSEN sl-0.5p 3.1/PSEN sl-0.5	500 N
PSEN sl-0.5p 3.1/PSEN sl-0.5fm [3]	500 N
PSEN sl-0.5p 4.1/PSEN sl-0.5	500 N
PSEN sl-0.5p 4.1/PSEN sl-0.5fm [3]	500 N
PSEN sl-0.5p 4.2/PSEN sl-0.5	500 N
PSEN sl-0.5p 4.2/PSEN sl-0.5fm [3]	500 N
PSEN sl-0.5p 6.1/PSEN sl-0.5	500 N
PSEN sl-0.5p 6.1/PSEN sl-0.5fm [3]	500 N
PSEN sl-1.0p 1.1/PSEN sl-1.0	1 000 N
PSEN sl-1.0p 1.1/PSEN sl-1.0fm [3]	1 000 N
PSEN sl-1.0p 1.1 VA/PSEN sl-1.0	1 000 N
PSEN sl-1.0p 2.1/PSEN sl-1.0	1 000 N
PSEN sl-1.0p 2.1/PSEN sl-1.0fm [3]	1 000 N
PSEN sl-1.0p 2.2/PSEN sl-1.0	1 000 N
PSEN sl-1.0p 2.2/PSEN sl-1.0fm [3]	1 000 N
PSEN sl-1.0p 3.1/PSEN sl-1.0	1 000 N
PSEN sl-1.0p 3.1/PSEN sl-1.0fm [3]	1 000 N
PSEN sl-1.0p 4.1/PSEN sl-1.0	1 000 N
PSEN sl-1.0p 4.1/PSEN sl-1.0fm [3]	1 000 N
PSEN sl-1.0p 4.2/PSEN sl-1.0	1 000 N
PSEN sl-1.0p 4.2/PSEN sl-1.0fm [3]	1 000 N
PSEN sl-1.0p 6.1/PSEN sl-1.0	1 000 N
PSEN sl-1.0p 6.1/PSEN sl-1.0fm [3]	1 000 N

Type of coding	Power consumption[1]	Dimensions (H x W x D) in mm		Connection type (connector)	Certification	Order number (unit)[2]
		Safety guard locking device	Actuator			
Coded[4]	4.8 W	122 x 45 x 44	138 x 52 x 23	M12, 8-pin	EAC, FCC[7], IC[7], TÜV, UL[7]	570500
Coded[4]	4.8 W	122 x 45 x 44	138 x 52 x 23	M12, 8-pin	EAC, FCC[7], IC[7], TÜV, UL[7]	570560
Fully coded[5]	4.8 W	122 x 45 x 44	138 x 52 x 23	M12, 8-pin	EAC, FCC[7], IC[7], TÜV, UL[7]	570501
Fully coded[5]	4.8 W	122 x 45 x 44	138 x 52 x 23	M12, 8-pin	EAC, FCC[7], IC[7], TÜV, UL[7]	570561
Unique, fully coded[6]	4.8 W	122 x 45 x 44	138 x 52 x 23	M12, 8-pin	EAC, FCC[7], IC[7], TÜV, UL[7]	570502
Unique, fully coded[6]	4.8 W	122 x 45 x 44	138 x 52 x 23	M12, 8-pin	EAC, FCC[7], IC[7], TÜV, UL[7]	570562
Coded[4]	4.8 W	122 x 45 x 44	138 x 52 x 23	M12, 8-pin	EAC, FCC[7], IC[7], TÜV, UL[7]	570570
Coded[4]	4.8 W	122 x 45 x 44	138 x 52 x 23	M12, 8-pin	EAC, FCC[7], IC[7], TÜV, UL[7]	570573
Fully coded[5]	4.8 W	122 x 45 x 44	138 x 52 x 23	M12, 8-pin	EAC, FCC[7], IC[7], TÜV, UL[7]	570571
Fully coded[5]	4.8 W	122 x 45 x 44	138 x 52 x 23	M12, 8-pin	EAC, FCC[7], IC[7], TÜV, UL[7]	570574
Unique, fully coded[6]	4.8 W	122 x 45 x 44	138 x 52 x 23	M12, 8-pin	EAC, FCC[7], IC[7], TÜV, UL[7]	570572
Unique, fully coded[6]	4.8 W	122 x 45 x 44	138 x 52 x 23	M12, 8-pin	EAC, FCC[7], IC[7], TÜV, UL[7]	570575
Fully coded[5]	4.8 W	122 x 45 x 44	138 x 52 x 23	M12, 8-pin	EAC, FCC[7], IC[7], TÜV, UL[7]	570581
Fully coded[5]	4.8 W	122 x 45 x 44	138 x 52 x 23	M12, 8-pin	EAC, FCC[7], IC[7], TÜV, UL[7]	570584
Coded[4]	7.2 W	172 x 45 x 44	188 x 52 x 23	M12, 8-pin	EAC, FCC[7], IC[7], TÜV, UL[7]	570600
Coded[4]	7.2 W	172 x 45 x 44	188 x 52 x 23	M12, 8-pin	EAC, FCC[7], IC[7], TÜV, UL[7]	570660
Coded[4]	7.2 W	172 x 45 x 44	188 x 52 x 23	M12, 8-pin	EAC, FCC[7], IC[7], TÜV, UL[7]	570630
Fully coded[5]	7.2 W	172 x 45 x 44	188 x 52 x 23	M12, 8-pin	EAC, FCC[7], IC[7], TÜV, UL[7]	570601
Fully coded[5]	7.2 W	172 x 45 x 44	188 x 52 x 23	M12, 8-pin	EAC, FCC[7], IC[7], TÜV, UL[7]	570661
Unique, fully coded[6]	7.2 W	172 x 45 x 44	188 x 52 x 23	M12, 8-pin	EAC, FCC[7], IC[7], TÜV, UL[7]	570602
Unique, fully coded[6]	7.2 W	172 x 45 x 44	188 x 52 x 23	M12, 8-pin	EAC, FCC[7], IC[7], TÜV, UL[7]	570662
Coded[4]	7.2 W	172 x 45 x 44	188 x 52 x 23	M12, 8-pin	EAC, FCC[7], IC[7], TÜV, UL[7]	570670
Coded[4]	7.2 W	172 x 45 x 44	188 x 52 x 23	M12, 8-pin	EAC, FCC[7], IC[7], TÜV, UL[7]	570673
Fully coded[5]	7.2 W	172 x 45 x 44	188 x 52 x 23	M12, 8-pin	EAC, FCC[7], IC[7], TÜV, UL[7]	570671
Fully coded[5]	7.2 W	172 x 45 x 44	188 x 52 x 23	M12, 8-pin	EAC, FCC[7], IC[7], TÜV, UL[7]	570674
Unique, fully coded[6]	7.2 W	172 x 45 x 44	188 x 52 x 23	M12, 8-pin	EAC, FCC[7], IC[7], TÜV, UL[7]	570672
Unique, fully coded[6]	7.2 W	172 x 45 x 44	188 x 52 x 23	M12, 8-pin	EAC, FCC[7], IC[7], TÜV, UL[7]	570675
Fully coded[5]	7.2 W	172 x 45 x 44	188 x 52 x 23	M12, 8-pin	EAC, FCC[7], IC[7], TÜV, UL[7]	570681
Fully coded[5]	7.2 W	172 x 45 x 44	188 x 52 x 23	M12, 8-pin	EAC, FCC[7], IC[7], TÜV, UL[7]	570684

[1] Gate locked [2] Unit comprising switch and actuator [3] Free-moving
[4] Switch accepts any PSENslock actuator
[5] Switch accepts only one PSENslock actuator, teach-in up to 8 times
[6] Switch accepts only one PSENslock actuator, no teach-in facility
[7] FCC, IC and UL certification applies only to individual components contained within the set

Cable selection:

From page 138

Keep up-to-date on safety gate systems PSENslock:

Webcode: web150408

Online information at www.pilz.com

Selection guide – PSENslock

Safety gate system PSENslock with 5-pin connector

Common features

- Safety gate systems for monitoring the position of movable guards in accordance with EN 60947-5-3
- Suitable for applications up to PL e of EN ISO 13849-1, SIL CL 3 of EN/IEC 62061 with magnetic guard locking for process protection tasks
- Series connection up to PL e of EN ISO 13849-1:
  - PSENcode, PSENslock with 5-pin connection for decentralized module PDP67 F8 DI ION
  - PSENslock and Pilz sensor technology with 8-pin connection for passive junction PDP67 F 4 code or PSEN Y junction (cable separator)
- Electrical data:
  - Supply voltage: 24 VDC
  - Voltage tolerance: – 15 … + 10 %
  - Outputs: 2 safety outputs and 1 signal output
- Mechanical data:
  - Vertical and lateral offset: +/– 3 or +/– 5 mm
  - Protection type: IP67



PSEN sl-0.5



PSEN sl-0.5 … fm

Type (switch/actuator)	Holding force
PSEN sl-0.5n 1.1/PSEN sl-0.5	500 N
PSEN sl-0.5n 1.1/PSEN sl-0.5fm [3]	500 N
PSEN sl-0.5n 2.1/PSEN sl-0.5	500 N
PSEN sl-0.5n 2.1/PSEN sl-0.5fm [3]	500 N
PSEN sl-0.5n 2.2/PSEN sl-0.5	500 N
PSEN sl-0.5n 2.2/PSEN sl-0.5fm [3]	500 N
PSEN sl-1.0n 1.1/PSEN sl-1.0	1 000 N
PSEN sl-1.0n 1.1/PSEN sl-1.0fm [3]	1 000 N
PSEN sl-1.0n 2.1/PSEN sl-1.0	1 000 N
PSEN sl-1.0n 2.1/PSEN sl-1.0fm [3]	1 000 N
PSEN sl-1.0n 2.2/PSEN sl-1.0	1 000 N
PSEN sl-1.0n 2.2/PSEN sl-1.0fm [3]	1 000 N

Accessories – safety gate system PSENslock



PSEN sl bracket sliding door

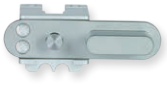

PSEN sl restart interlock

Description Type
One-way screw to secure the actuator **PSEN screw M5x20**
Mounting bracket for sensors **PSEN sl bracket sliding door** **PSEN sl bracket swing door**
Reset lock **PSEN sl restart interlock (padlock)**

Type of coding	Power consumption[1]	Dimensions (H x W x D) in mm		Connection type (connector)	Certification	Order number (unit)[2]
		Safety guard locking device	Actuator			
Coded[4]	4.8 W	122 x 45 x 44	138 x 52 x 23	M12, 5-pin	EAC, FCC[7], IC[7], TÜV, UL[7]	570503
Coded[4]	4.8 W	122 x 45 x 44	138 x 52 x 23	M12, 5-pin	EAC, FCC[7], IC[7], TÜV, UL[7]	570563
Fully coded[5]	4.8 W	122 x 45 x 44	138 x 52 x 23	M12, 5-pin	EAC, FCC[7], IC[7], TÜV, UL[7]	570504
Fully coded[5]	4.8 W	122 x 45 x 44	138 x 52 x 23	M12, 5-pin	EAC, FCC[7], IC[7], TÜV, UL[7]	570564
Unique, fully coded[6]	4.8 W	122 x 45 x 44	138 x 52 x 23	M12, 5-pin	EAC, FCC[7], IC[7], TÜV, UL[7]	570505
Unique, fully coded[6]	4.8 W	122 x 45 x 44	138 x 52 x 23	M12, 5-pin	EAC, FCC[7], IC[7], TÜV, UL[7]	570565
Coded[4]	7.2 W	172 x 45 x 44	188 x 52 x 23	M12, 5-pin	EAC, FCC[7], IC[7], TÜV, UL[7]	570603
Coded[4]	7.2 W	172 x 45 x 44	188 x 52 x 23	M12, 5-pin	EAC, FCC[7], IC[7], TÜV, UL[7]	570663
Fully coded[5]	7.2 W	172 x 45 x 44	188 x 52 x 23	M12, 5-pin	EAC, FCC[7], IC[7], TÜV, UL[7]	570604
Fully coded[5]	7.2 W	172 x 45 x 44	188 x 52 x 23	M12, 5-pin	EAC, FCC[7], IC[7], TÜV, UL[7]	570664
Unique, fully coded[6]	7.2 W	172 x 45 x 44	188 x 52 x 23	M12, 5-pin	EAC, FCC[7], IC[7], TÜV, UL[7]	570605
Unique, fully coded[6]	7.2 W	172 x 45 x 44	188 x 52 x 23	M12, 5-pin	EAC, FCC[7], IC[7], TÜV, UL[7]	570665

[1] Gate locked [2] Unit comprising switch and actuator [3] Free-moving
[4] Switch accepts any PSENslock actuator
[5] Switch accepts only one PSENslock actuator, teach-in up to 8 times
[6] Switch accepts only one PSENslock actuator, no teach-in facility
[7] FCC, IC and UL certification applies only to individual components contained within the set

Features	Quantity	Order number
▸ Stainless steel ▸ Drive: one-way slot (safety screw) ▸ M5, 20 mm ▸ Suitable for PSEN sl	10	540312
For sliding gate	2	570551
For swing gate	1	570550
▸ Mechanical add-on module for attachment to PSEN sl-0.5 or PSEN sl-1.0 ▸ Enables up to 2 padlocks or carabiners to be attached to stop the door closing and to prevent the machine from restarting ▸ Certification: TÜV	1	570552

Cable selection:

From page 138

Keep up-to-date on safety gate systems PSENslock:

Webcode: web150408

Online information at www.pilz.com

Safety gate system PSENmlock

The safety gate system PSENmlock provides safe interlocking and safe guard locking for personnel and process protection up to the highest category PL e.



PSEN ml b 1.1 unit



PSEN ml escape release cordset



PSEN ml door handle swinging door

Safe interlocking with safe guard locking

PSENmlock provides secure safety gate monitoring and safe guard locking in one product. The latter is enabled by dual-channel operation of the guard locking device. The switch is therefore especially suitable for machines with dangerous run-on, in which safe guard locking is also necessary up to PL d or PL e. Thanks to LEDs on three sides of the housing, diagnostics are easily visible in all three installation positions. The flexibly mounted actuator ensures a high tolerance compensation – even with sagging gates.

Safety even in the event of danger

Two versions with escape release are available to you as optional accessories. A bar is used to connect the PSEN ml escape release directly to the base unit, while the PSEN ml escape release cordset is mounted on the PSENmlock via a pull-push wire. The latter enables the installation of the safety gate system and escape release to be physically separate. With the right handles, you get an economical, space-saving complete solution for swing and sliding gates.

Type code for PSENmlock

PSEN ml b 1.1

Product area Pilz **SEN**sors	Version	Coding
Product group **ml – PSENmlock**	**b** **Base version** s Series connection	**1.1** **Coded** 2.1 Fully coded 2.2 Unique, fully coded
Operation ▸ Mechanical, coded ▸ Transponder (RFID) ▸ With safe semiconductor outputs		

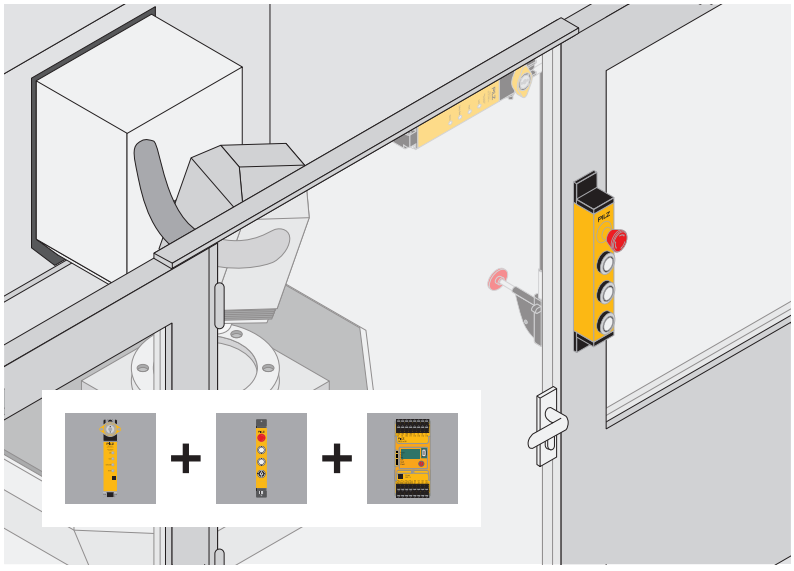

Components for your safe solution	Order number
Sensor: PSEN ml s 1.1 unit PSEN ml escape release cordset 1.5 m	570406 570470
Pushbutton unit: PIT gb LLLE	G1000001
PSENmlock connection: PSEN cable axial, M12, 8-pin, 10 m PITgatebox connection: PSEN cable axial, M12, 12-pin, 10 m	540321 631082
Evaluation device: PNOZ m B0 - Spring loaded terminals (1 set)	772100 751008

The optimum solution: the safety gate system PSENmlock in combination with the remote escape release, the pushbutton unit PITgatebox and the configurable safe small controllers PNOZmulti 2.

Your benefits at a glance

- Maximum safety:
  - Safe guard locking up to PL e
  - Safe interlocking up to PL e
- High holding force of 7500 N
- Easily visible diagnostics: LEDs on 3 sides of the housing
- Compact design: suitable for all 40 mm profiles, among others
- Flexible actuator: for high tolerance compensation – even with sagging gates
- No inadvertent activation of the guard locking due to the integral restart interlock
- Long service life: robust
- housing and mechanically robust
- Energy efficient: reduced power consumption during operation
- SDD-capable

SDD
SAFETY DEVICE DIAGNOSTICS

PSENmlock with series connection

With the series connection versions, you benefit from an economical installation thanks to reduced wiring work and series connection of the safe input and output signals. In combination with Safety Device Diagnostics (SDD), guard locking of individual sensors in the chain can be activated in a targeted manner – and all this without expensive individual wiring in the control cabinet. The SDD also enables simple and comprehensive diagnostics of the safety switches, reducing downtimes.

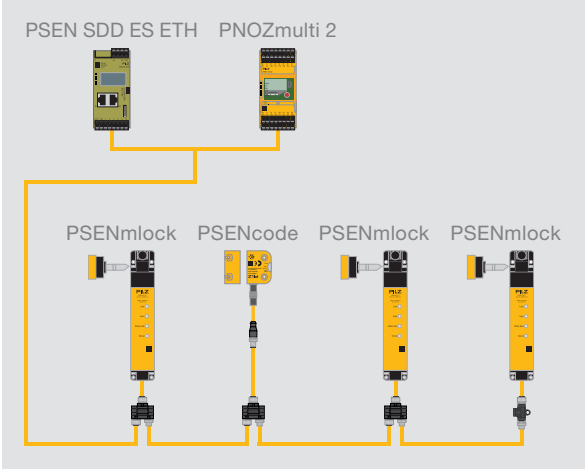

Targeted activation of individual sensors with series connection with the SDD (adapter, page 61 in Accessories).

Keep up-to-date on safety gate systems PSENmlock:

Webcode: web150409

Online information at www.pilz.com

Selection guide – PSENmlock

Common features

- Safety gate systems for monitoring the position of movable guards in accordance with EN 60947-5-3
- Suitable for applications up to PL e of EN ISO 13849-1, SIL CL 3 of EN/IEC 62061
- Electrical data:
  - Supply voltage: 24 VDC
  - 2 outputs: semiconductor, max. 100 mA each
  - Signal output: 100 mA
  - 2 inputs: 0.5 A, 150 ms
  - Voltage tolerance: – 15 … + 20 %
- Mechanical data:
  - Max. vertical offset: +/– 3 mm
  - Max. lateral offset: +/– 3 mm
  - Max. angular offset: +/– 1.5°
  - Max. angular offset about the x-axis: +/– 2°
  - Max. angular offset about the y-axis: +/– 2.5°
  - Max. angular offset about the z-axis: +/– 7.5°
  - Max. offset in the closing direction: +/– 2 mm
  - Integral latching force: 30 N
  - Protection type: IP67
- Type of coding:
  - Coded (Version 1.1)
  - Fully coded (Version 2.1)
  - Unique, fully coded (Version 2.2)

Safety gate system PSENmlock – Base version



PSEN ml b 1.1 unit



PSEN ml b 1.1 switch



PSEN ml b 2.1 actuator

Type (switch/actuator)	Holding force
Unit	
PSEN ml b 1.1 unit	7 500 N
PSEN ml b 2.1 unit	7 500 N
PSEN ml b 2.2 unit	7 500 N
Switch	
PSEN ml b 1.1 switch	7 500 N
PSEN ml b 2.1 switch	7 500 N
Actuator	
PSEN ml b 1.1 actuator	7 500 N
PSEN ml b 2.1 actuator	7 500 N
PSEN ml 1.1 round actuator	7 500 N
PSEN ml 2.1 round actuator	7 500 N

Safety gate system PSENmlock – Series connection



PSEN ml s 1.1 unit



PSEN ml s 1.1 switch

Type	Holding force
Unit	
PSEN ml s 1.1 unit	7 500 N
PSEN ml s 2.1 unit	7 500 N
PSEN ml s 2.2 unit	7 500 N
Switch	
PSEN ml s 1.1 switch	7 500 N
PSEN ml s 2.1 switch	7 500 N
PSEN ml s 2.2 switch	7 500 N

Type of coding	Dimensions (H x W x D) in mm	Certification	Connection type (connector)	Order number
Coded	217.2 x 40 x 40	FCC[2], IC[2], TÜV, UL[2]	M12, 8-pin, pigtail	570400[1]
Fully coded	217.2 x 40 x 40	FCC[2], IC[2], TÜV, UL[2]	M12, 8-pin, pigtail	570402[1]
Unique, fully coded	217.2 x 40 x 40	FCC[2], IC[2], TÜV, UL[2]	M12, 8-pin, pigtail	570404[1]
Coded	217.2 x 40 x 40	FCC[2], IC[2], TÜV, UL[2]	M12, 8-pin, pigtail	570401
Fully coded	217.2 x 40 x 40	FCC[2], IC[2], TÜV, UL[2]	M12, 8-pin, pigtail	570403
Coded	63.5 x 40 x 67.2	FCC[2], IC[2], TÜV, UL[2]	-	570480
Fully coded	63.5 x 40 x 67.2	FCC[2], IC[2], TÜV, UL[2]	-	570481
Coded	63.5 x 40 x 61.5	FCC[2], IC[2], TÜV, UL[2]	-	570482
Fully coded	63.5 x 40 x 61.5	FCC[2], IC[2], TÜV, UL[2]	-	570483

[1] Set comprising switch and actuator
[2] FCC, IC and UL certification applies only to individual components contained within the set

Type of coding	Dimensions (H x W x D) in mm	Certification	Connection type (connector)	Order number
Coded	217.2 x 40 x 40	FCC[2], IC[2], TÜV, UL[2]	M12, 12-pin, pigtail	570406
Fully coded	217.2 x 40 x 40	FCC[2], IC[2], TÜV, UL[2]	M12, 12-pin, pigtail	570408
Unique, fully coded	217.2 x 40 x 40	FCC[2], IC[2], TÜV, UL[2]	M12, 12-pin, pigtail	570410
Coded	217.2 x 40 x 40	FCC[2], IC[2], TÜV, UL[2]	M12, 12-pin, pigtail	570407
Fully coded	217.2 x 40 x 40	FCC[2], IC[2], TÜV, UL[2]	M12, 12-pin, pigtail	570409
Unique, fully coded	217.2 x 40 x 40	FCC[2], IC[2], TÜV, UL[2]	M12, 12-pin, pigtail	570411

[2] FCC, IC and UL certification applies only to individual components contained within the set

Cable selection:

From page 138

Keep up-to-date on safety gate systems PSENmlock:

Webcode: web150409

Online information at www.pilz.com

Selection guide – PSENmlock

Selection guide installation accessory

Type of gate	Handle	Use of the mounting plate for standard profiles (570490)		Order number
Swinging door	No	No		PSEN ml bracket swinging door 70 ____ 570493 [1]
		Yes		PSEN ml bracket swinging door 80 ____ 570494 [1]
	Yes	No		PSEN ml door handle swinging door 70 ____ 570496 [1]
		Yes		PSEN ml door handle swinging door 80 ____ 570497 [1]
Sliding gates	No	No		PSEN ml bracket sliding door ____ 570492 [1]
	Yes	No		PSEN ml door handle sliding door ____ 570495 [1]

[1] Actuators are not supplied with the device

Accessories – safety gate system PSENmlock



PSEN ml bracket sliding door



PSEN ml door handle swinging door

Description Type	Features	Quantity	Order number
Mounting plate **PSEN ml mounting plate**	For assembly on the standard profile	1	570490
Mounting bracket **PSEN ml bracket sliding door**	For sliding gate	1	570492
PSEN ml bracket swinging door 70	For swing gate	1	570493
PSEN ml bracket swinging door 80	For swing gate when using mounting plate 570490	1	570494
Handle **PSEN ml door handle sliding door**	For sliding gate	1	570495
PSEN ml door handle swinging door 70	For swing gate	1	570496
PSEN ml door handle swinging door 80	For swing gate when using mounting plate 570490	1	570497
Screw set **PSEN screw set bracket swinging door**	For swing door mounting bracket	1	570498
PSEN screw set bracket sliding door	For sliding door mounting bracket	1	570499
PSEN screw M5x10	For PSENmlock actuator	10	540311
PSEN screw M5x20	For PSENmlock actuator	10	540312

Accessories – safety gate system PSENmlock



PSEN ml escape release



PSEN ml escape release cordset 2,0m

Description Type	Features	Quantity	Order number
PSEN ml escape release	Suitable for PSEN ml b, PSEN ml s	1	570460
PSEN ml escape release extension	Suitable for PSEN ml b, PSEN ml s	1	570462
PSEN ml escape release cordset 0.5 m	Suitable for PSEN ml b, PSEN ml s, length: 0.5 m	1	570466
PSEN ml escape release cordset 0.75m	Suitable for PSEN ml b, PSEN ml s, length: 0.75 m	1	570467
PSEN ml escape release cordset 1.0m	Suitable for PSEN ml b, PSEN ml s, length: 1.0 m	1	570468
PSEN ml escape release cordset 1.25m	Suitable for PSEN ml b, PSEN ml s, length: 1.25 m	1	570469
PSEN ml escape release cordset 1.5m	Suitable for PSEN ml b, PSEN ml s, length: 1.5 m	1	570470
PSEN ml escape release cordset 2.0m	Suitable for PSEN ml b, PSEN ml s, length: 2.0 m	1	570471
PSEN ml escape release cordset 2.5m	Suitable for PSEN ml b, PSEN ml s, length: 2.5 m	1	570472
PSEN ml escape release cordset 3.0m	Suitable for PSEN ml b, PSEN ml s, length: 3.0 m	1	570473
PSEN ml escape release cordset 3.5m	Suitable for PSEN ml b, PSEN ml s, length: 3.5 m	1	570474
PSEN ml escape release cordset 4.0m	Suitable for PSEN ml b, PSEN ml s, length: 4.0 m	1	570475
Actuator **PSEN ml actuator 10° adapter**	Adapter for aligning the PSENmlock actuator for small gates, radius: 300 – 500 mm.	1	570484
PSEN ml actuator center ring	5 centering for PSENmlock actuator, especially suited for small gates.	1	570485

Cable selection:

From page 138

Keep up-to-date on safety gate systems PSENmlock:

Webcode: web150409

Online information at www.pilz.com

Safety gate system PSENsgate

PSENsgate provides secure safety gate monitoring, protecting personnel and plant to the highest category PL e in one system.



PSEN sg2c-3LPE PSEN sg2c-5LPLLE

Save time and components

You benefit from a high savings potential: use just one turnkey system and all your safety functions and control elements are integrated.

A number of new system types are available to select, with optional integratable control and operator elements such as pushbuttons, key switches, illuminated buttons, section stop, emergency stop or escape release.

Economical solution

When combined with safe control technology from Pilz, what you get is a complete safety gate monitoring solution that's safe and economical. It is also easy to connect in series with many other sensors PSENcode and PSENslock. The robust design is another impressive feature of the PSENsgate.

Type code PSENsgate

PSEN sg2c-5LPKLE-M12/5

Product area Pilz **SEN**sors	Generation	Connection via	Design/elements	Operator elements/ emergency stop [1]	Connection type [2]
Product group **sg – PSENsgate**	1 **2**	**c Spring-loaded terminal, plug in**	3 Short design, 3 elements **5 Long design, 5 elements**	_ Not present **P Pushbutton** **L Illuminated pushbutton** **K Key switch** B Key button S Section stop C Blind cover **E E-STOP**	_ Not present **M12/5 Connector, M12, 5-pin**
Operation ▶ Mechanical, coded ▶ Transponder (RFID) ▶ With safe guard locking and safety gate monitoring					

[1] Sequence: Key assignment from bottom to top
[2] Connection only for large design

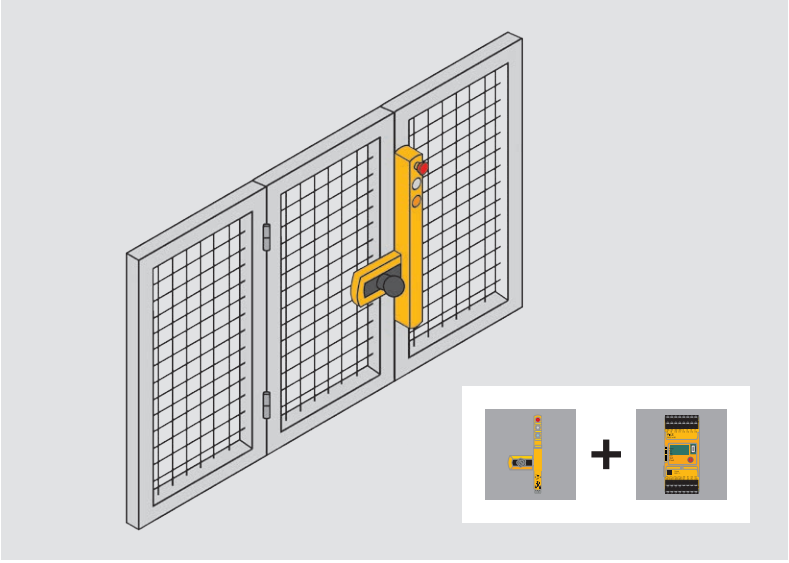

Components for your safe solution	Order number
Sensor: PSEN sg2c-3LPE	570 800
Connection: Cable, depending on function, e.g. 16 x 0.25 mm^2	-
Evaluation device: PNOZ m B0 - Spring loaded terminals (1 set)	772 100 751 008

The optimum solution: monitoring a safety gate using the safety gate system PSENsgate and the configurable safe small controllers PNOZmulti 2.

Your benefits at a glance

- Greater flexibility: large selection of different control and operating elements, e.g. key switches, emergency stops, plus the ability to connect enabling switches
- Maximum safety: just one switch per safety gate for personnel and plant protection up to PL e
- Engineering and costs are minimized: one product rather than several individual components
- Time saving: reduced installation and wiring effort thanks to a turnkey system with integratable control elements and emergency stop (optional)
- Simple assembly: for right and left-hinged gates
- For universal use: suitable for all 45 mm profiles
- Energy efficient: reduced current consumption (gate lock max. 2 W)



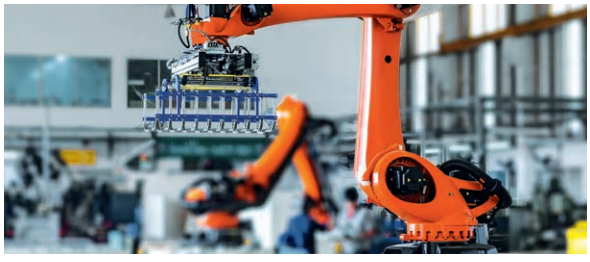

Keep up-to-date on safety gate systems PSENsgate:

Webcode: web150407

Online information at www.pilz.com

Selection guide – PSENsgate

Safety gate system PSENsgate

Common features

- Safety gate systems for monitoring the position of movable guards in accordance with EN 60947-5-3
- Suitable for applications up to PL e of EN ISO 13849-1, SIL CL 3 of EN/IEC 62061
- Series connection in combination with PSENsgate, PSENcode, PSENslock up to PL e of EN ISO 13849-1, SIL CL 3 of EN/IEC 62061:
  - With 8-pin connector via Y junction (cable separator) or PDP67 F 4 code
- Electrical data:
  - Supply voltage: 24 VDC
  - Outputs: 2 (semiconductor, each max. 500 mA)
  - Signal output: 500 mA
  - “Safe range” input (solenoid pin): 1.5 A, 150 ms
  - Power consumption depends on configuration (door locked): max. 2 W
  - Voltage tolerance: – 15/+ 10 %
- Mechanical data:
  - Vertical and lateral offset: +/– 5 or +/– 5 mm
  - Holding force, swing gate: 2000 N
  - Connection type: plug-in spring-loaded terminals
  - Protection type: IP65/54
- Type of coding:
  - Coded
  - Unique, fully coded (Version 2.2)
- PSENsgate must be used in conjunction with the auxiliary release; the escape release is optional
- Scope: sensing device with pushbuttons including colored caps and escape release bar as well as actuator (bolt) for left or right-hinged doors



PSEN sg2c-3LPE



PSEN sg2c-5LPLLE

Type	No. of pushbuttons Emergency stop
Short unit type	
PSEN sg2c-3LPE	1
PSEN sg2c-3LBE	1
PSEN sg2c-3LPS	-
PSEN sg2c-3LBS	-
PSEN sg2c-3LPC	-
PSEN sg2c-3LBC	-
PSEN sg2c-3LPE 2.2	1
Long unit type	
PSEN sg2c-5LPLLE	1
PSEN sg2c-5LBLLE	1
PSEN sg2c-5LPLLS	-
PSEN sg2c-5LBLLS	-
PSEN sg2c-5LPLLC	-
PSEN sg2c-5LBLLC	-
PSEN sg2c-5LPLLE 2.2	1
Long unit type: connection type M12, 5-pin	
PSEN sg2c-5LPKLE-M12/5	1
PSEN sg2c-5LBKLE-M12/5	1
PSEN sg2c-5LPKLS-M12/5	-
PSEN sg2c-5LBKLS-M12/5	-
PSEN sg2c-5LPKLC-M12/5	-
PSEN sg2c-5LBKLC-M12/5	-
PSEN sg2c-5LPKLE-M12/5 2.2	1
Freely configurable unit type (2 freely assignable buttons)	
PSEN sg2c-5CCLLE	1

Section stop	Push-button	Key-operated pushbutton	Key switch	Dimensions (H x W x D) in mm	Type of coding	Certification	Order number
-	2	-	-	445 x 200 x 105	Coded	FCC [1], TÜV, UL [1]	570800
-	1	1	-	445 x 200 x 105	Coded	FCC [1], TÜV, UL [1]	570802
1	2	-	-	445 x 200 x 105	Coded	FCC [1], TÜV, UL [1]	570804
1	1	1	-	445 x 200 x 105	Coded	FCC [1], TÜV, UL [1]	570806
-	2	-	-	445 x 200 x 105	Coded	FCC [1], TÜV, UL [1]	570808
-	1	1	-	445 x 200 x 105	Coded	FCC [1], TÜV, UL [1]	570810
-	2	-	-	445 x 200 x 105	Unique, fully coded	FCC [1], TÜV, UL [1]	570880
-	4	-	-	546 x 200 x 105	Coded	FCC [1], TÜV, UL [1]	570812
-	3	1	-	546 x 200 x 105	Coded	FCC [1], TÜV, UL [1]	570814
1	4	-	-	546 x 200 x 105	Coded	FCC [1], TÜV, UL [1]	570816
1	3	1	-	546 x 200 x 105	Coded	FCC [1], TÜV, UL [1]	570818
-	4	-	-	546 x 200 x 105	Coded	FCC [1], TÜV, UL [1]	570820
-	3	1	-	546 x 200 x 105	Coded	FCC [1], TÜV, UL [1]	570822
-	4	-	-	546 x 200 x 105	Unique, fully coded	FCC [1], TÜV, UL [1]	570882
-	3	-	1	558.5 x 200 x 105	Coded	FCC [1], TÜV, UL [1]	570824
-	2	1	1	558.5 x 200 x 105	Coded	FCC [1], TÜV, UL [1]	570826
1	3	-	1	558.5 x 200 x 105	Coded	FCC [1], TÜV, UL [1]	570828
1	2	1	1	558.5 x 200 x 105	Coded	FCC [1], TÜV, UL [1]	570830
-	3	-	1	558.5 x 200 x 105	Coded	FCC [1], TÜV, UL [1]	570832
-	2	1	1	558.5 x 200 x 105	Coded	FCC [1], TÜV, UL [1]	570834
-	3	-	1	558.5 x 200 x 105	Unique, fully coded	FCC [1], TÜV, UL [1]	570884
-	-	-	-	555 x 200 x 108	Coded	FCC [1], TÜV, UL	570836

[1] FCC and UL certification applies only to individual components contained within the set

Cable selection:

From page 138

Keep up-to-date on safety gate systems PSENsgate:

Webcode: web150407

Online information at www.pilz.com

Selection guide – PSENsgate

Accessories – safety gate system PSENsgate



PSEN sg escape release pin



PSEN sg auxiliary release pin



PSEN sg color covers (pushbutton)

Description Type
Escape release **PSEN sg escape release pin**
Auxiliary release **PSEN sg auxiliary release pin**
Cover **PSEN sg2 cover**
Color control elements **PSEN sg color covers (pushbutton)**
Connection cable 200 m **PSEN cable 200 m-8x0.25 mm²**

Features	Quantity	Order number
Certification: TÜV	1	570870
Certification: TÜV	1	570871
Certification: TÜV	1	570773
Certification: TÜV	6	570875
-	1	570793

Cable selection:

From page 138

Keep up-to-date on safety gate systems PSENsgate:

Webcode: web150407

Online information at www.pilz.com

Light curtains

When the production process requires active intervention, light curtains from the product range PSENopt provide optimum protection for plant and machinery. PSENopt provide finger, hand and body protection in accordance with EN/IEC 61496-1/-2, depending on the requirement. A comprehensive range of accessories and light curtains with advanced functionalities such as muting, blanking or cascading support flexible application on any machine.



Access guarding



Body protection



Hand protection



Finger protection



PSEN opII3F...



PSEN op2H-A...



PSEN op2H-SL...

PSENopt II – new generation
With a high level of robustness of 50 g, light curtains PSENopt II are ideally suited for rugged industrial environments. In addition to the first Type 3 version, they are also available for Type 4 applications (see page 72).

PSENopt Advanced
The light curtains PSENopt Advanced enable maximum flexibility thanks to their multifunctionality: Depending on the requirement, either muting or blanking is implemented, with or without cascading, using the same light curtain. Their full functionality can be used in conjunction with the configurable safe small controllers PNOZmulti 2 (see page 74).

PSENopt slim
Light curtains PSENopt slim can be used above all in applications where space is at a premium thanks to their slimline design (see page 76).

For safe access to the production process

PSENopt offer greater productivity, while safeguarding access to the work process.

Save costs:

- PSENopt devices have a compact design and therefore save space.
- They can quickly be incorporated, operated and maintained in your plant.
- Protected fields and detection capability can be set up to be process-oriented.

Select the appropriate compliant PSENopt

Carry out a safety assessment and evaluate the risk in accordance with EN/IEC 61496-1/-2. You can then use this information to work out the appropriate light curtain resolution for your application, in accordance with EN ISO 13855.

Select the electrosensitive protective device that best meets your needs. This will mean greater safety for finger, hand and body, compatible with a wide range of applications.

Simple commissioning

As single beams can be shown in the software PSENopt Configurator, it is much easier to align and monitor the light curtains; reaction times can be reduced to a minimum through rapid diagnostics.

Inspection of safeguards

The independent inspection body of Pilz GmbH & Co. KG, Ostfildern, accredited by the German Accreditation Body DAkkS to EN ISO/IEC 17020:2012, supports you as a partner in conducting the internationally valid safety inspection of your electrosensitive protective equipment.





Keep up-to-date on light curtains PSENopt:

Webcode: web150525

Online information at www.pilz.com

Selection guide – Light curtains

Selection guide – for every application, the right light curtain PSENopt



PSENopt II



PSENopt Advanced



PSENopt slim

Type
Resolution
Approved in accordance with EN/IEC 61496
Can be used in applications in accordance with
EN ISO 13849-1
EN/IEC 62061
Resolution
Finger protection
Hand protection
Body protection
Height of protected field
Range
Response time
Protection type
Dimensions
Features/functions
Connection type

PSENopt II – new generation		PSENopt Advanced		PSENopt slim	
Finger, hand, body protection		Finger and hand protection		Finger and hand protection	
Type 3	Type 4	Type 2	Type 4	Type 2	Type 4
PL d	PL e	PL c	PL e	PL c	PL e
SIL CL 2	SIL CL 3	SIL CL 1	SIL CL 3	SIL CL 1	SIL CL 3
14 mm		14 mm		14 mm	
30 mm		30 mm		24 mm	
▸ 170 mm (operating range 0.2 … 15 m) ▸ 300 mm (operating range 10 … 55 m)		-		-	
150 … 1 800 mm		300 … 1 800 mm		150 … 1 200 mm	
8/18/55 m		7/20 m		6 m	
6 … 20 ms (without coding)		13 … 33 ms		7 … 17 ms	
IP65		IP65		IP65	
35 x 40 mm		35 x 40.8 mm		15.4 x 32.6 mm	
▸ Diagnostics ▸ High level of robustness ▸ Freedom from dead zones ▸ PDP67 connection compatibility ▸ Coding ▸ Simple wiring		▸ Feedback loop monitoring ▸ Reset ▸ Acknowledgement ▸ Diagnostics and muting ▸ Blanking ▸ Cascading ▸ Manual restart ▸ Configuration via software possible ▸ Freedom from dead zones		▸ Feedback loop monitoring ▸ Diagnostics ▸ Cascading ▸ Slimline design ▸ Freedom from dead zones	
5-pin		12-pin/5-pin		5-pin	

Keep up-to-date on light curtains PSENopt:

Webcode: web150525

Online information at www.pilz.com

Light curtains PSENopt II – new generation

The new second generation of light curtains PSENopt II is characterized by the high level of robustness and is suitable for all Type 3 and Type 4 applications in accordance with EN/IEC 61496.



PSEN opII3F...

High level of robustness for reducing downtimes

With a shock resistance of 50 g, PSENopt II are extremely robust with regard to shock, vibration and collision. They are also resistant to dust and cold (up to –10 °C), making them ideal for use in rugged industrial environments. The operator can evaluate the essential causes and system defects responsible for the machine stopping by means of the LEDs. This reduces downtimes.



Shock, vibration, collision



Cold



Dust

Type code for PSENopt II

PSEN opII3H-s-30-045

Product area Pilz **SEN**sors	Approval	Resolution	Functions	Resolution	Height of protected field
Product group opII – PSENopt II	**3 Type 3** [1] 4 Type 4 [2]	B Body protection **H Hand protection** F Finger protection	**s Standard**	14 14 mm **30 30 mm** 170 170 mm [3] 300 300 mm [4]	015 150 mm 030 300 mm **045 450 mm** 060 600 mm 075 750 mm 090 900 mm 105 1 050 mm 120 1 200 mm 135 1 350 mm 150 1 500 mm 165 1 650 mm 180 1 800 mm
Operation ▸ Non-contact, optical, 2D (area monitoring) ▸ With safe semiconductor outputs					

[1] Approved in accordance with EN/IEC 61496-1
[2] Approved in accordance with EN/IEC 61496-1/-2
[3] With operating range 0.2 – 15 m
[4] With operating range 10 – 55 m

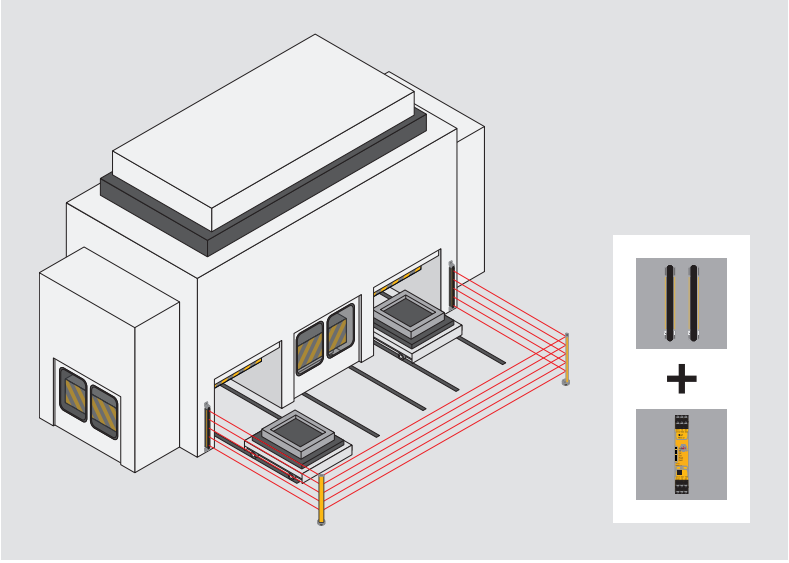

Your benefits at a glance

- Finger, hand and body protection for applications up to PL e
- Highly robust for protection against shock, collision and vibration
- User-friendly diagnostics via LEDs to reduce downtimes
- Rapid and simple assembly, installation and commissioning
- Flexible use with enhanced safety – thanks to freedom from dead zones
- One-stop shop – economical all-in-one solution with PDP67 and comprehensive accessories

Components for your safe solution	Order number
Sensor: PSEN opII4H-s-30-150	632069
Mirror columns: PSEN opII mirror column-165 Set	632010
Connection: ▸ PSEN op cable M12-5sf 10 m (2x)	630312
Evaluation device: ▸ PNOZ s3	751103

The optimum solution: securing several sides of a danger zone with light curtains PSENopt II and compatible mirror columns.

Flexible arrangement

There are no limits to the physical arrangement of your light curtains. Thanks to the coding, the light curtains do not interfere with each other, even in close proximity. This is particularly true if the transmitter of the first pair of light curtains emits beams in the direction of the receiver of the second pair of light curtains. In this case, the pairs of light curtains can be configured with different beam codes.

Securing several sides of a danger zone

In order to secure several sides of a danger zone, the light curtains can be combined with our new PSENopt II mirror columns. Up to three access sides can be monitored with just one pair of light curtains and two mirror columns. This saves wiring work, space and money. The mirror columns are comprised of a post protector and an integrated mirror and can be used with all light curtains PSENopt and PSENopt II. The PSENopt II adjustable base unit is an optional accessory offering additional protection against strong mechanical impact.

Accessories:
From page 92

Cable selection:
From page 138

Keep up-to-date on light curtains PSENopt II:

Webcode: web150418

Online information at www.pilz.com

Light curtains PSENopt Advanced

The multifunctional light curtains PSENopt Advanced are used for the advanced functions muting, blanking and/or cascading. Configuration is intuitive via the software PSENopt Configurator. Reaction times can be reduced to a minimum through rapid diagnostics.



PSEN op2H-A…

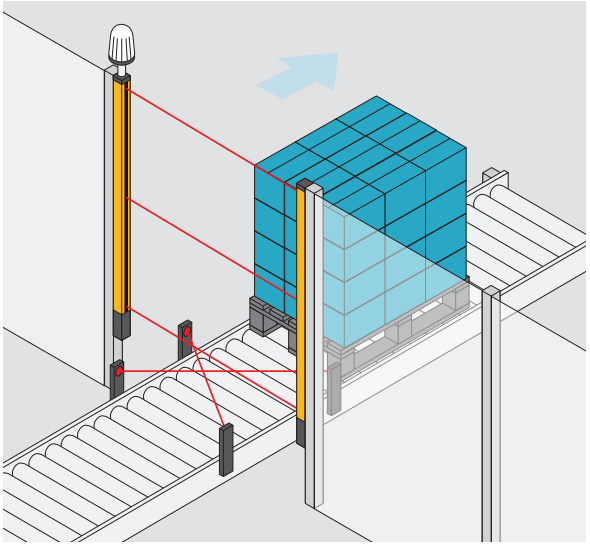

Muting with crossed muting sensors.

Rapid commissioning

Light curtains PSENopt Advanced are easy to commission using the software PSENopt Configurator. You can also take advantage of short reaction times thanks to rapid diagnostics.

Muting to distinguish between a person and material

PSENopt devices with muting function are suitable for transporting material into and out of a danger zone, when loading or unloading pallets for example.





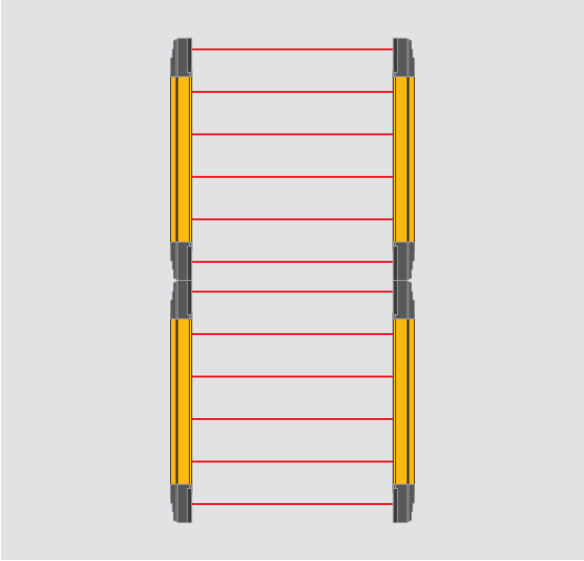

Continuous single beams during cascading, without dead zones, increase safety.

Your benefits at a glance

- Simple operation and commissioning with the new software PSENopt Configurator
- Short reaction times thanks to rapid diagnostics of fault states
- High flexibility:
  - 3 functionalities in one light curtain: muting, blanking, cascading
  - Flexible installation thanks to coding
  - Higher level of safety as there are no dead zones

Cascading function without dead zones for effective protection against encroachment into and behind the protected area

Adjacent protected fields can easily be safeguarded using the cascading function. Just connect master and slave quickly and simply using a convenient plug-in connector; also combines finger and hand protection.

Blanking for a flexible, uninterrupted production process

You can use the blanking function to blank out a defined area of the light curtain. The safety function will not be triggered when the material to be processed passes through. Blanking can be implemented in two different ways: fixed blanking and floating blanking.

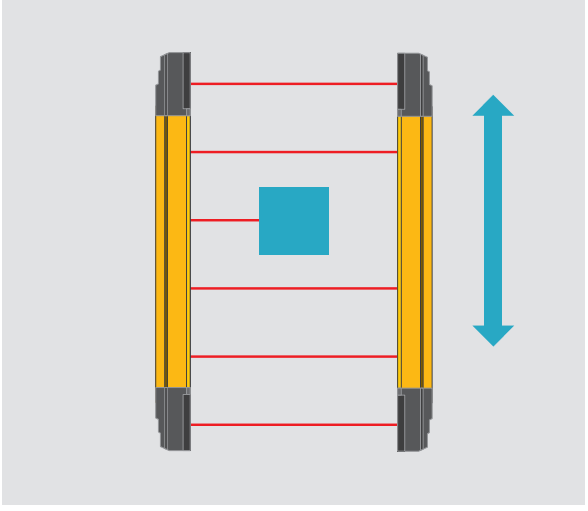

Floating blanking: One beam is blanked out. Any object that interrupts more than one beam will be detected.

Accessories:

From page 92

Cable selection:

From page 138

Keep up-to-date on light curtains PSENopt Advanced:

Webcode: web150423

Online information at www.pilz.com

Light curtains PSENopt slim

Thanks to their slimline design, light curtains PSENopt slim are perfect for applications where space is at a premium.

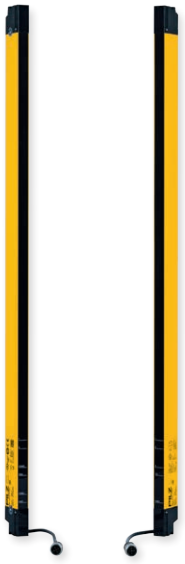

PSEN op2H-SL…

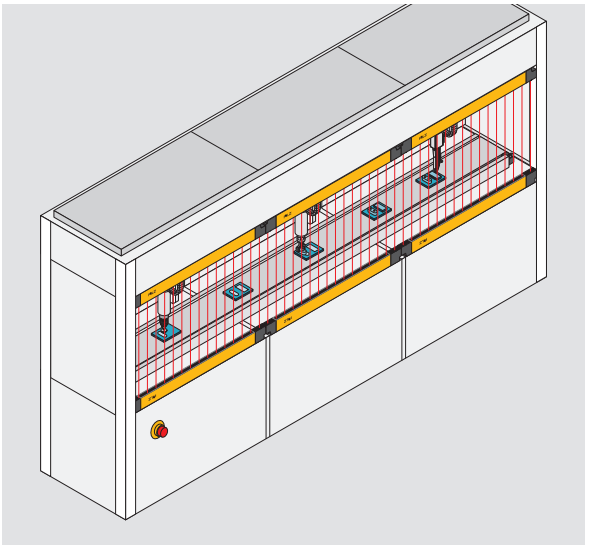

Linear cascading

Small light curtain, high level of safety

With their slimline design, PSENopt slim can be used above all in applications where space is at a premium. In this case, the Type 2 and Type 4 light curtains provide finger and hand protection, depending on the requirement. The operator can evaluate the essential causes and system defects responsible for the machine stopping by means of the LEDs. This reduces downtimes.

Linear cascading without dead zones

Thanks to the cascading function with no dead zones, PSENopt slim provide effective protection against encroachment into and behind the protected area. Adjacent protected fields can easily be safeguarded using the cascading function.





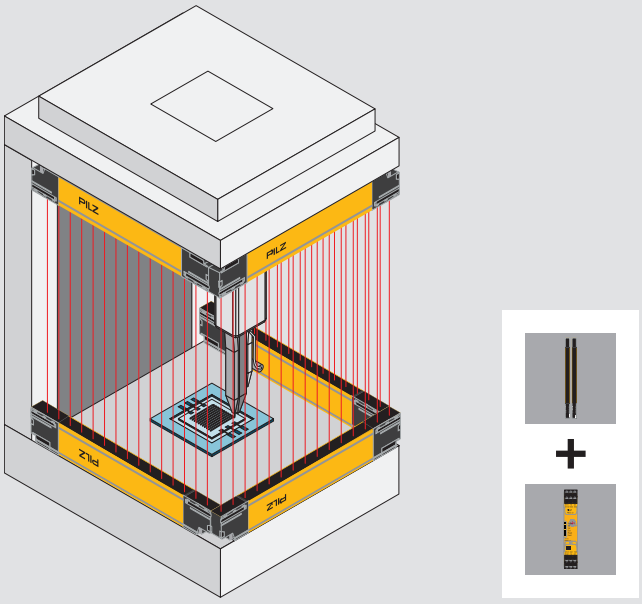

Your benefits at a glance

- Finger and hand protection for applications up to PL c and PL e
- Narrow design saves space and costs
- Cascading function without dead zones for effective protection against encroachment into and behind the protected area
- User-friendly diagnostics via LEDs to reduce downtimes
- Rapid and simple assembly, installation and commissioning
- Safe and economical one-stop solution e.g. with PNOZsigma or PNOZmulti

Components for your safe solution	Order number
Sensor: 3 x PSEN op4F-SL-14-105/1	631157
Connection: ▸ PSEN cable M12-5sf 5m ▸ 2 x PSEN op SL cascading 0.1 m	 630311 631183
Evaluation device: ▸ PNOZ s3	 750103
Test rod for ESPE: PSEN op Testpiece F 14m	630345

The optimum solution: monitoring of space-critical applications with cascaded light curtains PSENopt slim and safety relay PNOZsigma/ configurable safe small controllers PNOZmulti 2.

Accessories:

From page 92

Cable selection:

From page 138

Keep up-to-date on light curtains PSENopt slim:

Webcode: web150423

Online information at www.pilz.com

Selection guide – PSENopt II

Body protection: Type 3 – light curtain PSEN opII3B

Common features

- Compliant and approved in accordance with:
  - EN/IEC 61508
  - EN/IEC 61496-1: Type 3
- For use in applications up to:
  - PL d of EN ISO 13849-1
  - SIL CL 2 of EN/IEC 62061
- No dead zones (except with protected field height 150 mm)
- Supply voltage: 24 VDC
- Connection:
  - Receiver: 1 x pigtail, M12, 5-pin
  - Transmitter: 1 x pigtail, M12, 5-pin
- Dimensions: 35 x 40 mm
- For response times see data sheet
- Coding “Code A”, “Code B”, “not coded”
- Simple wiring



PSEN opII3B-s-…

Type	Resolution
Body protection	
PSEN opII3B-s-170-045	170 mm
PSEN opII3B-s-170-060	170 mm
PSEN opII3B-s-170-075	170 mm
PSEN opII3B-s-170-090	170 mm
PSEN opII3B-s-170-120	170 mm
PSEN opII3B-s-170-150	170 mm
PSEN opII3B-s-300-045	300 mm
PSEN opII3B-s-300-060	300 mm
PSEN opII3B-s-300-075	300 mm
PSEN opII3B-s-300-090	300 mm
PSEN opII3B-s-300-120	300 mm
PSEN opII3B-s-300-150	300 mm

Body protection: Type 4 – light curtain PSEN opII4B

Common features

- Compliant and approved in accordance with:
  - EN/IEC 61508
  - EN/IEC 61496-1/-2: Type 4
- For use in applications up to:
  - PL e of EN ISO 13849-1
  - SIL CL 3 of EN/IEC 62061
- No dead zones (except with protected field height 150 mm)
- Supply voltage: 24 VDC
- Connection:
  - Receiver: 1 x pigtail, M12, 5-pin
  - Transmitter: 1 x pigtail, M12, 5-pin
- Dimensions: 35 x 40 mm
- For response times see data sheet
- Coding “Code A”, “Code B”, “not coded”
- Simple wiring



PSEN opII4B-s-…

Type	Resolution
Body protection	
PSEN opII4B-s-170-045	170 mm
PSEN opII4B-s-170-060	170 mm
PSEN opII4B-s-170-075	170 mm
PSEN opII4B-s-170-090	170 mm
PSEN opII4B-s-170-120	170 mm
PSEN opII4B-s-170-150	170 mm
PSEN opII4B-s-300-045	300 mm
PSEN opII4B-s-300-060	300 mm
PSEN opII4B-s-300-075	300 mm
PSEN opII4B-s-300-090	300 mm
PSEN opII4B-s-300-120	300 mm
PSEN opII4B-s-300-150	300 mm

Height of protected field	Range	Certification	Order number[1]
450 mm	0.2 …15 m	EAC, TÜV	632 100
600 mm	0.2 …15 m	EAC, TÜV	632 101
750 mm	0.2 …15 m	EAC, TÜV	632 102
900 mm	0.2 …15 m	EAC, TÜV	632 103
1 200 mm	0.2 …15 m	EAC, TÜV	632 104
1 500 mm	0.2 …15 m	EAC, TÜV	632 105
450 mm	10 … 55 m	EAC, TÜV	632 110
600 mm	10 … 55 m	EAC, TÜV	632 111
750 mm	10 … 55 m	EAC, TÜV	632 112
900 mm	10 … 55 m	EAC, TÜV	632 113
1 200 mm	10 … 55 m	EAC, TÜV	632 114
1 500 mm	10 … 55 m	EAC, TÜV	632 115

[1] Order number for transmitter, receiver and mounting bracket respectively (one unit)

Height of protected field	Range	Certification	Order number[1]
450 mm	0.2 …15 m	EAC, TÜV, UL[2]	632 120
600 mm	0.2 …15 m	EAC, TÜV, UL[2]	632 121
750 mm	0.2 …15 m	EAC, TÜV, UL[2]	632 122
900 mm	0.2 …15 m	EAC, TÜV, UL[2]	632 123
1 200 mm	0.2 …15 m	EAC, TÜV, UL[2]	632 124
1 500 mm	0.2 …15 m	EAC, TÜV, UL[2]	632 125
450 mm	10 … 55 m	EAC, TÜV, UL[2]	632 130
600 mm	10 … 55 m	EAC, TÜV, UL[2]	632 131
750 mm	10 … 55 m	EAC, TÜV, UL[2]	632 132
900 mm	10 … 55 m	EAC, TÜV, UL[2]	632 133
1 200 mm	10 … 55 m	EAC, TÜV, UL[2]	632 134
1 500 mm	10 … 55 m	EAC, TÜV, UL[2]	632 135

[1] Order number for transmitter, receiver and mounting bracket respectively (one unit)
[2] UL certification applies only to individual components contained within the set

Accessories:
From page 92

Cable selection:
From page 138

Keep up-to-date on light curtains PSENopt II:
Webcode: web150418

Online information at www.pilz.com

Selection guide – PSENopt II

Hand protection: Type 3 – light curtain PSEN opII3H

Common features

- Compliant and approved in accordance with:
  - EN/IEC 61508
  - EN/IEC 61496-1: Type 3
- For use in applications up to:
  - PL d of EN ISO 13849-1
  - SIL CL 2 of EN/IEC 62061
- No dead zones (except with protected field height 150 mm)
- Supply voltage: 24 VDC
- Connection:
  - Receiver: 1 x pigtail, M12, 5-pin
  - Transmitter: 1 x pigtail, M12, 5-pin
- Dimensions: 35 x 40 mm
- For response times see data sheet
- Coding “Code A”, “Code B”, “not coded”
- Simple wiring



PSEN opII3H-s-…

Type	Resolution
Hand protection	
PSEN opII3H-s-30-015	30 mm
PSEN opII3H-s-30-030	30 mm
PSEN opII3H-s-30-045	30 mm
PSEN opII3H-s-30-060	30 mm
PSEN opII3H-s-30-075	30 mm
PSEN opII3H-s-30-090	30 mm
PSEN opII3H-s-30-105	30 mm
PSEN opII3H-s-30-120	30 mm
PSEN opII3H-s-30-135	30 mm
PSEN opII3H-s-30-150	30 mm
PSEN opII3H-s-30-165	30 mm
PSEN opII3H-s-30-180	30 mm

Hand protection: Type 4 – light curtain PSEN opII4H

Common features

- Compliant and approved in accordance with:
  - EN/IEC 61508
  - EN/IEC 61496-1/-2: Type 4
- For use in applications up to:
  - PL e of EN ISO 13849-1
  - SIL CL 3 of EN/IEC 62061
- No dead zones (except with protected field height 150 mm)
- Supply voltage: 24 VDC
- Connection:
  - Receiver: 1 x pigtail, M12, 5-pin
  - Transmitter: 1 x pigtail, M12, 5-pin
- Dimensions: 35 x 40 mm
- For response times see data sheet
- Coding “Code A”, “Code B”, “not coded”
- Simple wiring



PSEN opII4H-s-…

Type	Resolution
Hand protection	
PSEN opII4H-s-30-015	30 mm
PSEN opII4H-s-30-030	30 mm
PSEN opII4H-s-30-045	30 mm
PSEN opII4H-s-30-060	30 mm
PSEN opII4H-s-30-075	30 mm
PSEN opII4H-s-30-090	30 mm
PSEN opII4H-s-30-105	30 mm
PSEN opII4H-s-30-120	30 mm
PSEN opII4H-s-30-135	30 mm
PSEN opII4H-s-30-150	30 mm
PSEN opII4H-s-30-165	30 mm
PSEN opII4H-s-30-180	30 mm

Height of protected field	Range	Certification	Order number[1]
150 mm	0.2 … 18 m	EAC, KOSHA, TÜV	632 020
300 mm	0.2 … 18 m	EAC, KOSHA, TÜV	632 021
450 mm	0.2 … 18 m	EAC, KOSHA, TÜV	632 022
600 mm	0.2 … 18 m	EAC, KOSHA, TÜV	632 023
750 mm	0.2 … 18 m	EAC, KOSHA, TÜV	632 024
900 mm	0.2 … 18 m	EAC, KOSHA, TÜV	632 025
1 050 mm	0.2 … 18 m	EAC, KOSHA, TÜV	632 026
1 200 mm	0.2 … 18 m	EAC, KOSHA, TÜV	632 027
1 350 mm	0.2 … 18 m	EAC, KOSHA, TÜV	632 028
1 500 mm	0.2 … 18 m	EAC, KOSHA, TÜV	632 029
1 650 mm	0.2 … 18 m	EAC, KOSHA, TÜV	632 030
1 800 mm	0.2 … 18 m	EAC, KOSHA, TÜV	632 031

[1] Order number for transmitter, receiver and mounting bracket respectively (one unit)

Height of protected field	Range	Certification	Order number[1]
150 mm	0.2 … 18 m	EAC, KOSHA, TÜV, UL[2]	632 060
300 mm	0.2 … 18 m	EAC, KOSHA, TÜV, UL[2]	632 061
450 mm	0.2 … 18 m	EAC, KOSHA, TÜV, UL[2]	632 062
600 mm	0.2 … 18 m	EAC, KOSHA, TÜV, UL[2]	632 063
750 mm	0.2 … 18 m	EAC, KOSHA, TÜV, UL[2]	632 064
900 mm	0.2 … 18 m	EAC, KOSHA, TÜV, UL[2]	632 065
1 050 mm	0.2 … 18 m	EAC, KOSHA, TÜV, UL[2]	632 066
1 200 mm	0.2 … 18 m	EAC, KOSHA, TÜV, UL[2]	632 067
1 350 mm	0.2 … 18 m	EAC, KOSHA, TÜV, UL[2]	632 068
1 500 mm	0.2 … 18 m	EAC, KOSHA, TÜV, UL[2]	632 069
1 650 mm	0.2 … 18 m	EAC, KOSHA, TÜV, UL[2]	632 070
1 800 mm	0.2 … 18 m	EAC, KOSHA, TÜV, UL[2]	632 071

[1] Order number for transmitter, receiver and mounting bracket respectively (one unit)
[2] UL certification applies only to individual components contained within the set

Accessories:
From page 92

Cable selection:
From page 138

Keep up-to-date on light curtains PSENopt II:
Webcode: web150418

Online information at www.pilz.com

Selection guide – PSENopt II

Finger protection: Type 3 – light curtain PSEN opII3F

Common features

- Compliant and approved in accordance with:
  - EN/IEC 61508
  - EN/IEC 61496-1: Type 3
- For use in applications up to:
  - PL d of EN ISO 13849-1
  - SIL CL 2 of EN/IEC 62061
- No dead zones (except with protected field height 150 mm)
- Supply voltage: 24 VDC
- Connection:
  - Receiver: 1 x pigtail, M12, 5-pin
  - Transmitter: 1 x pigtail, M12, 5-pin
- Dimensions: 35 x 40 mm
- For response times see data sheet
- Coding “Code A”, “Code B”, “not coded”
- Simple wiring



PSEN opII3F-s-…

Type	Resolution
Finger protection	
PSEN opII3F-s-14-015	14 mm
PSEN opII3F-s-14-030	14 mm
PSEN opII3F-s-14-045	14 mm
PSEN opII3F-s-14-060	14 mm
PSEN opII3F-s-14-075	14 mm
PSEN opII3F-s-14-090	14 mm
PSEN opII3F-s-14-105	14 mm
PSEN opII3F-s-14-120	14 mm
PSEN opII3F-s-14-135	14 mm
PSEN opII3F-s-14-150	14 mm
PSEN opII3F-s-14-165	14 mm
PSEN opII3F-s-14-180	14 mm

Finger protection: Type 4 – light curtain PSEN opII4F

Common features

- Compliant and approved in accordance with:
  - EN/IEC 61508
  - EN/IEC 61496-1/-2: Type 4
- For use in applications up to:
  - PL e of EN ISO 13849-1
  - SIL CL 3 of EN/IEC 62061
- No dead zones (except with protected field height 150 mm)
- Supply voltage: 24 VDC
- Connection:
  - Receiver: 1 x pigtail, M12, 5-pin
  - Transmitter: 1 x pigtail, M12, 5-pin
- Dimensions: 35 x 40 mm
- For response times see data sheet
- Coding “Code A”, “Code B”, “not coded”
- Simple wiring



PSEN opII4F-s-…

Type	Resolution
Finger protection	
PSEN opII4F-s-14-015	14 mm
PSEN opII4F-s-14-030	14 mm
PSEN opII4F-s-14-045	14 mm
PSEN opII4F-s-14-060	14 mm
PSEN opII4F-s-14-075	14 mm
PSEN opII4F-s-14-090	14 mm
PSEN opII4F-s-14-105	14 mm
PSEN opII4F-s-14-120	14 mm
PSEN opII4F-s-14-135	14 mm
PSEN opII4F-s-14-150	14 mm
PSEN opII4F-s-14-165	14 mm
PSEN opII4F-s-14-180	14 mm

Height of protected field	Range	Certification	Order number[1]
150 mm	0.2 … 8 m	EAC, KOSHA, TÜV	632 040
300 mm	0.2 … 8 m	EAC, KOSHA, TÜV	632 041
450 mm	0.2 … 8 m	EAC, KOSHA, TÜV	632 042
600 mm	0.2 … 8 m	EAC, KOSHA, TÜV	632 043
750 mm	0.2 … 8 m	EAC, KOSHA, TÜV	632 044
900 mm	0.2 … 8 m	EAC, KOSHA, TÜV	632 045
1 050 mm	0.2 … 8 m	EAC, KOSHA, TÜV	632 046
1 200 mm	0.2 … 8 m	EAC, KOSHA, TÜV	632 047
1 350 mm	0.2 … 8 m	EAC, KOSHA, TÜV	632 048
1 500 mm	0.2 … 8 m	EAC, KOSHA, TÜV	632 049
1 650 mm	0.2 … 8 m	EAC, KOSHA, TÜV	632 050
1 800 mm	0.2 … 8 m	EAC, KOSHA, TÜV	632 051

[1] Order number for transmitter, receiver and mounting bracket respectively (one unit)

Height of protected field	Range	Certification	Order number[1]
150 mm	0.2 … 8 m	EAC, KOSHA, TÜV, UL[2]	632 080
300 mm	0.2 … 8 m	EAC, KOSHA, TÜV, UL[2]	632 081
450 mm	0.2 … 8 m	EAC, KOSHA, TÜV, UL[2]	632 082
600 mm	0.2 … 8 m	EAC, KOSHA, TÜV, UL[2]	632 083
750 mm	0.2 … 8 m	EAC, KOSHA, TÜV, UL[2]	632 084
900 mm	0.2 … 8 m	EAC, KOSHA, TÜV, UL[2]	632 085
1 050 mm	0.2 … 8 m	EAC, KOSHA, TÜV, UL[2]	632 086
1 200 mm	0.2 … 8 m	EAC, KOSHA, TÜV, UL[2]	632 087
1 350 mm	0.2 … 8 m	EAC, KOSHA, TÜV, UL[2]	632 088
1 500 mm	0.2 … 8 m	EAC, KOSHA, TÜV, UL[2]	632 089
1 650 mm	0.2 … 8 m	EAC, KOSHA, TÜV, UL[2]	632 090
1 800 mm	0.2 … 8 m	EAC, KOSHA, TÜV, UL[2]	632 091

[1] Order number for transmitter, receiver and mounting bracket respectively (one unit)
[2] UL certification applies only to individual components contained within the set

Accessories:
From page 92

Cable selection:
From page 138

Keep up-to-date on light curtains PSENopt II:
Webcode: web150418

Online information at www.pilz.com

Selection guide – PSENopt Advanced

Hand protection, muting: Type 2 – light curtain PSEN op2H-A

Common features

- Compliant and approved in accordance with:
  - EN/IEC 61508
  - EN/IEC 61496-1/-2: Type 2
- For use in applications up to:
  - PL c of EN ISO 13849-1
  - SIL CL 1 of EN/IEC 62061
- Function selection:
  - Manual/automatic restart
  - Muting (total/partial) via soft keys
  - Feedback loop monitoring (EDM)
  - Override function
  - Operating range reduction
- Semiconductor outputs: 2 pieces
- No dead zones
- Supply voltage: 24 VDC
- Connection:
  - Receiver Rx:
    1 x connector, M12, 12-pin;
    1 x connector, M12, 5-pin
  - Transmitter Tx:
    1 x connector, M12, 5-pin
- Dimensions: 35 x 40.8 mm
- For response times see data sheet



PSEN op2H-A-30-…

Type	Resolution
Hand protection, muting	
PSEN op2H-A-30-030/1	30 mm
PSEN op2H-A-30-045/1	30 mm
PSEN op2H-A-30-060/1	30 mm
PSEN op2H-A-30-075/1	30 mm
PSEN op2H-A-30-090/1	30 mm
PSEN op2H-A-30-105/1	30 mm
PSEN op2H-A-30-120/1	30 mm
PSEN op2H-A-30-135/1	30 mm
PSEN op2H-A-30-150/1	30 mm
PSEN op2H-A-30-165/1	30 mm
PSEN op2H-A-30-180/1	30 mm

Hand protection, muting, blanking, cascading: Type 4 – light curtain PSEN op4H-A

Common features

- Compliant and approved in accordance with:
  - EN/IEC 61508
  - EN/IEC 61496-1/-2: Type 4
- For use in applications up to:
  - PL e of EN ISO 13849-1
  - SIL CL 3 of EN/IEC 62061
- Function selection:
  - Manual/automatic restart
  - Muting (total/partial) via soft keys/software
  - Fixed/floating blanking via soft keys/software
  - Cascading
  - Feedback loop monitoring (EDM)
  - Beam coding
  - Override function
  - Operating range reduction
  - Programming software (online/offline) and monitoring
- Semiconductor outputs: 2 pieces
- No dead zones
- Supply voltage: 24 VDC
- Connection:
  - Receiver Rx: 1 x connector, M12, 12-pin;
    1 x connector, M12, 5-pin (for muting only)
  - Transmitter Tx: 1 x connector, M12, 5-pin
- Dimensions: 35 x 40.8 mm
- For response times see data sheet



PSEN op4H-A-30-…

Type	Resolution
Hand protection, muting, blanking, cascading	
PSEN op4H-A-30-030/1	30 mm
PSEN op4H-A-30-045/1	30 mm
PSEN op4H-A-30-060/1	30 mm
PSEN op4H-A-30-075/1	30 mm
PSEN op4H-A-30-090/1	30 mm
PSEN op4H-A-30-105/1	30 mm
PSEN op4H-A-30-120/1	30 mm
PSEN op4H-A-30-135/1	30 mm
PSEN op4H-A-30-150/1	30 mm
PSEN op4H-A-30-165/1	30 mm
PSEN op4H-A-30-180/1	30 mm

Height of protected field	Range	Certification	Order number[1]
300 mm	0.2 … 20 m	EAC, TÜV, UL[2]	631 040
450 mm	0.2 … 20 m	EAC, TÜV, UL[2]	631 041
600 mm	0.2 … 20 m	EAC, TÜV, UL[2]	631 042
750 mm	0.2 … 20 m	EAC, TÜV, UL[2]	631 043
900 mm	0.2 … 20 m	EAC, TÜV, UL[2]	631 044
1 050 mm	0.2 … 20 m	EAC, TÜV, UL[2]	631 045
1 200 mm	0.2 … 20 m	EAC, TÜV, UL[2]	631 046
1 350 mm	0.2 … 20 m	EAC, TÜV, UL[2]	631 047
1 500 mm	0.2 … 20 m	EAC, TÜV, UL[2]	631 048
1 650 mm	0.2 … 20 m	EAC, TÜV, UL[2]	631 049
1 800 mm	0.2 … 20 m	EAC, TÜV, UL[2]	631 050

[1] Order number for transmitter, receiver and mounting bracket respectively (one unit)
[2] UL certification applies only to individual components contained within the set

Height of protected field	Range	Certification	Order number[1]
300 mm	0.2 … 20 m	EAC, TÜV, UL[2]	631 020
450 mm	0.2 … 20 m	EAC, TÜV, UL[2]	631 021
600 mm	0.2 … 20 m	EAC, TÜV, UL[2]	631 022
750 mm	0.2 … 20 m	EAC, TÜV, UL[2]	631 023
900 mm	0.2 … 20 m	EAC, TÜV, UL[2]	631 024
1 050 mm	0.2 … 20 m	EAC, TÜV, UL[2]	631 025
1 200 mm	0.2 … 20 m	EAC, TÜV, UL[2]	631 026
1 350 mm	0.2 … 20 m	EAC, TÜV, UL[2]	631 027
1 500 mm	0.2 … 20 m	EAC, TÜV, UL[2]	631 028
1 650 mm	0.2 … 20 m	EAC, TÜV, UL[2]	631 029
1 800 mm	0.2 … 20 m	EAC, TÜV, UL[2]	631 030

[1] Order number for transmitter, receiver and mounting bracket respectively (one unit); pigtail cables are not supplied with the device.
[2] UL certification applies only to individual components contained within the set

Accessories:
From page 92

Cable selection:
From page 138

Keep up-to-date on light curtains PSENopt Advanced:

Webcode: web150423

Online information at www.pilz.com

Selection guide – PSENopt Advanced

Finger protection, muting, blanking, cascading: Type 4 – light curtain PSEN op4F-A

Common features

- Compliant and approved in accordance with:
  - EN/IEC 61508
  - EN/IEC 61496-1/-2: Type 4
- For use in applications up to:
  - PL e of EN ISO 13849-1
  - SIL CL 3 of EN/IEC 62061
- Function selection:
  - Manual/automatic restart
  - Muting (total/partial) via soft keys/software
  - Fixed/floating blanking via soft keys/software
  - Cascading
  - Feedback loop monitoring (EDM)
  - Beam coding
  - Override function
  - Operating range reduction
  - Programming software (online/offline) and monitoring
- Semiconductor outputs: 2 pieces
- No dead zones
- Supply voltage: 24 VDC
- Connection:
  - Receiver Rx: 1 x connector, M12, 12-pin; 1 x connector, M12, 5-pin (for muting only)
  - Transmitter Tx: 1 x connector, M12, 5-pin
- Dimensions: 35 x 40.8 mm
- For response times see data sheet



PSEN op4F-A-14-…

Type	Resolution
Finger protection, muting, blanking, cascading	
PSEN op4F-A-14-030/1	14 mm
PSEN op4F-A-14-045/1	14 mm
PSEN op4F-A-14-060/1	14 mm
PSEN op4F-A-14-075/1	14 mm
PSEN op4F-A-14-090/1	14 mm
PSEN op4F-A-14-105/1	14 mm
PSEN op4F-A-14-120/1	14 mm
PSEN op4F-A-14-135/1	14 mm
PSEN op4F-A-14-150/1	14 mm
PSEN op4F-A-14-165/1	14 mm
PSEN op4F-A-14-180/1	14 mm

Height of protected field	Range	Certification	Order number[1]
300 mm	0.2 … 7 m	EAC, TÜV, UL[2]	631 000
450 mm	0.2 … 7 m	EAC, TÜV, UL[2]	631 001
600 mm	0.2 … 7 m	EAC, TÜV, UL[2]	631 002
750 mm	0.2 … 7 m	EAC, TÜV, UL[2]	631 003
900 mm	0.2 … 7 m	EAC, TÜV, UL[2]	631 004
1 050 mm	0.2 … 7 m	EAC, TÜV, UL[2]	631 005
1 200 mm	0.2 … 7 m	EAC, TÜV, UL[2]	631 006
1 350 mm	0.2 … 7 m	EAC, TÜV, UL[2]	631 007
1 500 mm	0.2 … 7 m	EAC, TÜV, UL[2]	631 008
1 650 mm	0.2 … 7 m	EAC, TÜV, UL[2]	631 009
1 800 mm	0.2 … 7 m	EAC, TÜV, UL[2]	631 010

[1] Order number for transmitter, receiver and mounting bracket respectively (one unit); pigtail cables are not supplied with the device.
[2] UL certification applies only to individual components contained within the set

Accessories:
From page 92

Cable selection:
From page 138

Keep up-to-date on light curtains PSENopt Advanced:

Webcode: web150423

Online information at www.pilz.com

Selection guide – PSENopt slim

Hand protection: Type 2 – light curtain PSEN op2H-SL

Common features

- Compliant and approved in accordance with:
  - EN/IEC 61508
  - EN/IEC 61496-1/-2: Type 2
- For use in applications up to:
  - PL c of EN ISO 13849-1
  - SIL CL 1 of EN/IEC 62061
- Function selection:
  - Manual/automatic restart
  - Feedback loop monitoring (EDM)
  - Cascading
- No dead zones
- Supply voltage: 24 VDC
- Connection:
  - Receiver: 1 x pigtail, M12, 5-pin
  - Transmitter: 1 x pigtail, M12, 5-pin
- Dimensions: 15.4 x 32.6 mm
- For response times see data sheet

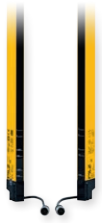

PSEN op2H-SL-24-...

Type	Resolution
PSEN op2H-SL-24-015/1	24 mm
PSEN op2H-SL-24-030/1	24 mm
PSEN op2H-SL-24-045/1	24 mm
PSEN op2H-SL-24-060/1	24 mm
PSEN op2H-SL-24-075/1	24 mm
PSEN op2H-SL-24-090/1	24 mm
PSEN op2H-SL-24-105/1	24 mm
PSEN op2H-SL-24-120/1	24 mm

Hand protection: Type 4 – light curtain PSEN op4H-SL

Common features

- Compliant and approved in accordance with:
  - EN/IEC 61508
  - EN/IEC 61496-1/-2: Type 4
- For use in applications up to:
  - PL e of EN ISO 13849-1
  - SIL CL 3 of EN/IEC 62061
- Function selection:
  - Manual/automatic restart
  - Feedback loop monitoring (EDM)
  - Cascading
- No dead zones
- Supply voltage: 24 VDC
- Connection:
  - Receiver: 1 x pigtail, M12, 5-pin
  - Transmitter: 1 x pigtail, M12, 5-pin
- Dimensions: 15.4 x 32.6 mm
- For response times see data sheet

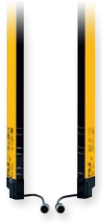

PSEN op4H-SL-24-...

Type	Resolution
PSEN op4H-SL-24-015/1	24 mm
PSEN op4H-SL-24-030/1	24 mm
PSEN op4H-SL-24-045/1	24 mm
PSEN op4H-SL-24-060/1	24 mm
PSEN op4H-SL-24-075/1	24 mm
PSEN op4H-SL-24-090/1	24 mm
PSEN op4H-SL-24-105/1	24 mm
PSEN op4H-SL-24-120/1	24 mm

Height of protected field	Range	Certification	Order number[1]
150 mm	0.2 … 6 m	TÜV, UL [2]	631 100
300 mm	0.2 … 6 m	TÜV, UL [2]	631 101
450 mm	0.2 … 6 m	TÜV, UL [2]	631 102
600 mm	0.2 … 6 m	TÜV, UL [2]	631 103
750 mm	0.2 … 6 m	TÜV, UL [2]	631 104
900 mm	0.2 … 6 m	TÜV, UL [2]	631 105
1 050 mm	0.2 … 6 m	TÜV, UL [2]	631 106
1 200 mm	0.2 … 6 m	TÜV, UL [2]	631 107

[1] Order number for transmitter, receiver and mounting bracket respectively (one unit)
[2] UL certification applies only to individual components contained within the set

Height of protected field	Range	Certification	Order number[1]
150 mm	0.2 … 6 m	TÜV, UL [2]	631 120
300 mm	0.2 … 6 m	TÜV, UL [2]	631 121
450 mm	0.2 … 6 m	TÜV, UL [2]	631 122
600 mm	0.2 … 6 m	TÜV, UL [2]	631 123
750 mm	0.2 … 6 m	TÜV, UL [2]	631 124
900 mm	0.2 … 6 m	TÜV, UL [2]	631 125
1 050 mm	0.2 … 6 m	TÜV, UL [2]	631 126
1 200 mm	0.2 … 6 m	TÜV, UL [2]	631 127

[1] Order number for transmitter, receiver and mounting bracket respectively (one unit)
[2] UL certification applies only to individual components contained within the set

Accessories:

From page 92

Cable selection:

From page 138

Keep up-to-date on light curtains PSENopt slim:

Webcode: web150423

Online information at www.pilz.com

Selection guide – PSENopt slim, PSENopt single-

Finger protection: Type 4 – light curtain PSEN op4F-SL

Common features

- Compliant and approved in accordance with:
  - EN/IEC 61508
  - EN/IEC 61496-1/-2: Type 4
- For use in applications up to:
  - PL e of EN ISO 13849-1
  - SIL CL 3 of EN/IEC 62061
- Function selection:
  - Manual/automatic restart
  - Feedback loop monitoring (EDM)
  - Cascading
- No dead zones
- Supply voltage: 24 VDC
- Connection:
  - Receiver: 1 x pigtail, M12, 5-pin
  - Transmitter: 1 x pigtail, M12, 5-pin
- Dimensions: 15.4 x 32.6 mm
- For response times see data sheet

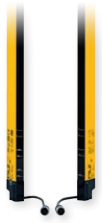

PSEN op4F-SL-14-…

Type	Resolution
PSEN op4F-SL-14-015/1	14 mm
PSEN op4F-SL-14-021/1	14 mm
PSEN op4F-SL-14-030/1	14 mm
PSEN op4F-SL-14-036/1	14 mm
PSEN op4F-SL-14-042/1	14 mm
PSEN op4F-SL-14-045/1	14 mm
PSEN op4F-SL-14-048/1	14 mm
PSEN op4F-SL-14-054/1	14 mm
PSEN op4F-SL-14-060/1	14 mm
PSEN op4F-SL-14-066/1	14 mm
PSEN op4F-SL-14-072/1	14 mm
PSEN op4F-SL-14-075/1	14 mm
PSEN op4F-SL-14-078/1	14 mm
PSEN op4F-SL-14-084/1	14 mm
PSEN op4F-SL-14-090/1	14 mm
PSEN op4F-SL-14-096/1	14 mm
PSEN op4F-SL-14-102/1	14 mm
PSEN op4F-SL-14-105/1	14 mm
PSEN op4F-SL-14-108/1	14 mm
PSEN op4F-SL-14-114/1	14 mm
PSEN op4F-SL-14-120/1	14 mm

Single-beam safety light barriers PSEN op2S/4S

Common features

- PL e/SIL CL 3 in conjunction with:
  - Safety relay PNOZ e7p
  - Configurable safe small controllers PNOZmulti 2: PNOZ m0p, PNOZ m1p, PNOZ m2p
  - Programmable control system PSS: PSS DI2O T
- Supply voltage: 20 … 30 VDC
- Design: M18
- Connection: connector, M12, 4-pin
- For response times see data sheet



PSEN op4S-1-2

Type	Resolution/ No. of beams
PSEN op2S-1-1	Access guarding (1 beam)
PSEN op4S-1-1	Access guarding (1 beam)
PSEN op4S-1-2	Access guarding (1 beam)

beam safety light barriers

Height of protected field	Range	Certification	Order number[1]
150 mm	0.2 … 6 m	TÜV, UL [2]	631 140
210 mm	0.2 … 6 m	TÜV, UL [2]	631 141
300 mm	0.2 … 6 m	TÜV, UL [2]	631 142
360 mm	0.2 … 6 m	TÜV, UL [2]	631 143
420 mm	0.2 … 6 m	TÜV, UL [2]	631 144
450 mm	0.2 … 6 m	TÜV, UL [2]	631 145
480 mm	0.2 … 6 m	TÜV, UL [2]	631 146
540 mm	0.2 … 6 m	TÜV, UL [2]	631 147
600 mm	0.2 … 6 m	TÜV, UL [2]	631 148
660 mm	0.2 … 6 m	TÜV, UL [2]	631 149
720 mm	0.2 … 6 m	TÜV, UL [2]	631 150
750 mm	0.2 … 6 m	TÜV, UL [2]	631 151
780 mm	0.2 … 6 m	TÜV, UL [2]	631 152
840 mm	0.2 … 6 m	TÜV, UL [2]	631 153
900 mm	0.2 … 6 m	TÜV, UL [2]	631 154
960 mm	0.2 … 6 m	TÜV, UL [2]	631 155
1 020 mm	0.2 … 6 m	TÜV, UL [2]	631 156
1 050 mm	0.2 … 6 m	TÜV, UL [2]	631 157
1 080 mm	0.2 … 6 m	TÜV, UL [2]	631 158
1 140 mm	0.2 … 6 m	TÜV, UL [2]	631 159
1 200 mm	0.2 … 6 m	TÜV, UL [2]	631 160

[1] Order number for transmitter, receiver and mounting bracket respectively (one unit)
[2] UL certification applies only to individual components contained within the set

Approved in accordance with EN/IEC 61496-1/-2	Features	Range	Certification	Order number[1]
Type 2	Infrared	0 … 8 m	EAC, TÜV, UL [2]	630 380
Type 4	Infrared	0 … 8 m	EAC, TÜV, UL [2]	630 381
Type 4	Laser	0 … 40 m	EAC, TÜV, UL [2]	630 382

[1] Order number for transmitter, receiver and mounting bracket respectively (one unit)
[2] UL certification applies only to individual components contained within the set

Accessories:
From page 92

Cable selection:
From page 138

Keep up-to-date on light curtains PSENopt slim and PSENopt:

Webcode: web150423

Online information at www.pilz.com

Selection guide – Accessories PSENopt

Accessories PSENopt II – Hand and finger protection



PSEN opII
Adv Bracket Kit-3

Type	Features	Quantity	Order number
PSEN opII Laserpointer	▸ Laser pointer ▸ Certification: CE	1	632014
PSEN opII Bracket Kit	Flexible bracket	2	632015
PSEN opII Adv Bracket Kit-2	Dead-zone-free attachment with degrees of freedom in 3 axes, 4 mounting plates	4	632016
PSEN opII Adv Bracket Kit-3	Dead-zone-free attachment with degrees of freedom in 3 axes, 6 mounting plates	6	632017
PSEN opII Testpiece F 14 mm	Test rod for finger resolution	1	632018
PSEN opII Testpiece H 30 mm	Test rod for hand resolution	1	632019

Accessories PSENopt, PSENopt II – Mirror columns



PSEN opII mirror
column-060



PSEN opII adjustable
base unit

Type	Features	Protection field height to max.	Order number
PSEN opII mirror column-060	▸ Mirror column for protection against shock, collision and vibration ▸ Mirror column consisting of a post protector and an integrated mirror ▸ Can be used with light curtains PSENopt and PSENopt II ▸ Optional accessories: PSENopt II adjustable base unit	60 mm	632032
PSEN opII mirror column-090		90 mm	632033
PSEN opII mirror column-120		120 mm	632034
PSEN opII mirror column-165		165 mm	632035
PSEN opII mirror column-195		195 mm	632036
PSEN opII adjustable base unit		-	632037

Accessories PSENopt Advanced – hand and finger protection



PSEN op Advanced Programming Adapter

Description Type	Features	Quantity	Order number
Mounting bracket **PSEN op cascading bracket**	▸ Corner fixture for 2 light curtains	1	631 061
Adapter **PSEN op Advanced Programming Adapter**	▸ Programming adapter for PSENopt Configurator [1], use with PSEN op Ethernet cable (see page 160)	1	631 070

[1] To use the software, the adapter must be ordered.

Accessories PSENopt slim – hand and finger protection



PSEN op SL Bracket O

Type	Features	Quantity	Order number
PSEN op SL Bracket C	Fastening kit PSENopt slim C-shape	1	631 180
PSEN op SL Bracket L	Fastening kit PSENopt slim L-shape	1	631 181
PSEN op SL Bracket O	Fastening kit PSENopt slim O-shape	1	631 182
PSEN op SL Testpiece F 24 mm	Test rod, diameter 24 mm	1	631 186

Accessories PSENopt (1st generation) – single-beam safety light device

Description Type	Features	Quantity	Order number
Deviating mirror **PSEN 2S/4S mirror**	Suitable for light barriers PSEN op2S/4S	1	630 711
Mounting bracket **PSEN 2S/4S bracket**	Suitable for light barriers PSEN op2S/4S	2	630 712

Safety laser scanners PSENscan

Stationary or mobile area guarding as well as access monitoring – the safety laser scanner PSENscan offers the optimum solution for two-dimensional area monitoring.



PSEN sc B 5.5

Simple configuration

The safety laser scanner PSENscan offers two-dimensional area monitoring with an opening angle of 275 degrees and a protected field range of up to 5.5 meters. Thanks to the free configuration of warning fields and protected fields as well as adaptation to structural conditions, the scanner can be optimally integrated into the widest range of applications. The PSENscan Configurator enables fast and simple configuration.

Simultaneous monitoring of up to three safety zones

With PSENscan, up to three safety zones can be monitored simultaneously and independently of each other. Only the plant section that a person has entered is stopped. This allows the safety distances of your plant to be optimized. The result is increased plant productivity and improved plant ergonomics while ensuring optimum safety.

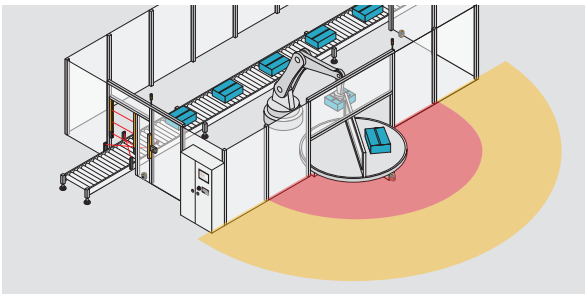

Stationary safeguarding of danger zones

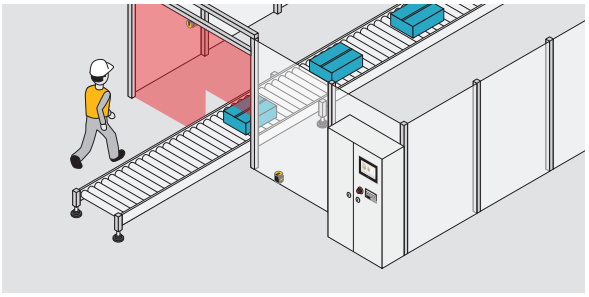

Access guarding

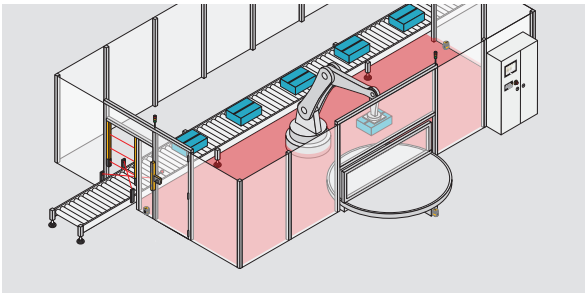

Encroachment from behind

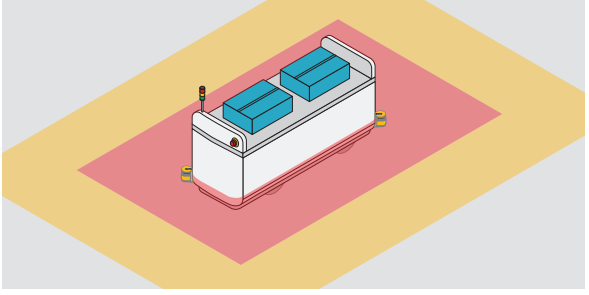

Safeguarding of automated guided vehicles

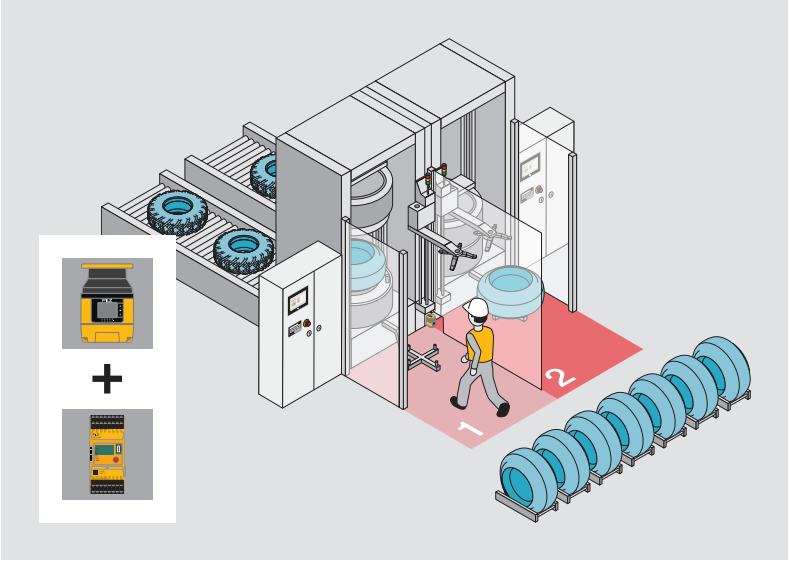

Components for your safe solution	Order number
Sensor: PSEN sc M 5.5 08-17	6D000019
Installation assistance: PSEN sc bracket PR	6D000002
Evaluation device: PNOZ m B0 - Spring loaded terminals (1 set)	772 100 751 008

The optimum solution: two-dimensional area monitoring of up to three safety zones simultaneously with safety laser scanners PSENscan and configurable safe small controllers PNOZmulti 2.

Productive area monitoring – including in series

Up to four safety laser scanners PSENscan can be connected in accordance with the master-slave principle. In this case the configuration is made centrally on the master scanner and is then passed to the slaves.

Your benefits at a glance

- Protected field ranges of up to 5.5 meters
- Compact housing
- Free configuration of the protected fields and warning fields, adaptation to structural conditions
- Integrated operator display
- Robust to dust
- Easy to assemble and align with the appropriate accessories
- Fast and simple configuration with the PSENscan Configurator
- Simultaneous monitoring of up to 3 separate zones with only one scanner
- Up to 70 switchable configurations can be set up
- Series connection of up to 4 scanners
- Exchangeable storage medium for transferring the configuration

PSEN

Fast and simple configuration with the PSENscan Configurator.

Safety laser scanners

Type code for PSENscan

PSEN sc B 3.0 08-12

Product area Pilz **SEN**sors	Type	Safety zone	Expansions
Product group **sc – PSENscan**	**B** **Base version** L Light M Master S Slave	**3.0** **3.0 m** 5.5 5.5 m	_ 8-pin storage medium **08-12** **8 or 12-pin exchangeable storage medium** 08-17 8 and 17-pin exchangeable storage medium
Operation Non-contact, optical, 2D (area monitoring)			

Keep up-to-date on safety laser scanners PSENscan:

Webcode: web181395

Online information at www.pilz.com

Selection guide – PSENscan

Safety laser scanners PSENscan

Common features

- Compliant and approved in accordance with:
  - EN/IEC 61496-1: Type 3
  - EN ISO 13849-1: PL d
  - IEC 61508: SIL 2
- Opening angle: 275°
- Operating range: 3.0 or 5.5 m safety zone, 40 m warning zone
- Reaction time: 62 ms
- Protection type IP65
- Dimensions (H x W x D) in mm: 152 x 102 x 112.5
- Additional functions for the light, master and slave versions:
  - Muting
  - EDM
  - Override
- Additional functions for the master and slave versions:
  - Restart in accordance with EN/IEC 61496-3
  - Vertical applications



PSEN sc B 5.5

Type	Resolution	Operating range safety zone
Base version		
PSEN sc B 5.5	70 mm	5.5 m
Light versions		
PSEN sc L 3.0 08-12	40, 70 mm	3.0 m
PSEN sc L 5.5 08-12	40, 70 mm	5.5 m
Master versions		
PSEN sc M 3.0 08-12	40, 70 mm	3.0 m
PSEN sc M 5.5 08-12	40, 70 mm	5.5 m
PSEN sc M 5.5 08-17 [2]	40, 70 mm	5.5 m
Slave versions		
PSEN sc S 3.0 08-12	40, 70 mm	3.0 m
PSEN sc S 5.5 08-12	40, 70 mm	5.5 m

[1] With simultaneous monitoring
[2] Available soon

Accessories – safety laser scanner PSENscan



PSEN sc bracket PR



PSEN sc bracket F



PSEN sc bracket H



PSEN sc bracket C

Type
PSEN sc bracket PR
PSEN sc bracket P
PSEN sc bracket H
PSEN sc memory 08-17
PSEN sc memory 08-12
PSEN sc cleaner
PSEN sc cloth
PSEN sc bracket F
PSEN sc bracket C

Safety zones [1]	Warning zones [1]	Switchable configurations	Certification	Expansions/ memory module	Order number
1	1	-	TÜV, UL	8-pin memory module (not exchangeable)	6D000001
1	1	3	TÜV, UL	8 or 12-pin exchangeable memory module	6D000012
1	1	3	TÜV, UL	8 or 12-pin exchangeable memory module	6D000013
1	1	3	TÜV, UL	8 or 12-pin exchangeable memory module	6D000016
1	1	3	TÜV, UL	8 or 12-pin exchangeable memory module	6D000017
2	2	8	TÜV, UL	8 and 17-pin exchangeable memory module	6D000019
1	1	3	TÜV, UL	8 or 12-pin exchangeable memory module	6D000020
1	1	3	TÜV, UL	8 or 12-pin exchangeable memory module	6D000021

PSEN

Fast and simple configuration with the PSENscan Configurator.

Features	Quantity	Order number
Mounting bracket for tilt angle and roll angle adjustment	1	6D000002
Mounting bracket for tilt angle adjustment	1	6D000003
Accessories for head protection	1	6D000004
Memory module 8 and 17-pin, M12	1	6D000005
Memory module 8 or 12-pin, M12	1	6D000006
Cleaning agent	1	6D000008
Cleaning cloth	1	6D000009
Mounting bracket for floor fastening	1	6D000010
Mounting head for corner fastening	1	6D000011

Keep up-to-date on safety laser scanners PSENscan:

Webcode: web181395

Online information at www.pilz.com

Camera-based protection systems PSENvip

The camera-based protection systems PSENvip are mobile protection systems. They are used for safe monitoring of press brakes. When installed on the upper die, the system detects even the smallest foreign body in the protected field between transmitter and receiver. The two product types PSENvip and PSENvip 2 belong to the PSENvip camera-based protection systems.





Bending angle is recorded

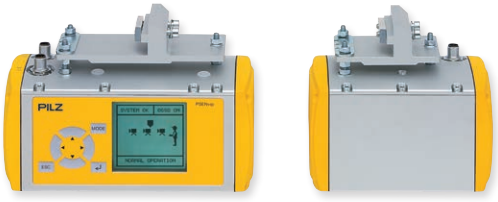

PSENvip RL D Set



PSENvip R E

PSENvip – the safe, complete solution for press retrofits

Together with the configurable safe small controllers PNOZmulti 2 or the automation system PSS 4000, you receive a safe, complete solution for press retrofits. Renewal of the CE marking is not necessary following a retrofit (see page 100).

PSENvip 2 – the integrated solution for modern press brakes

PSENvip 2 is the second, extended generation of the camera-based protection system. In combination with the automation system PSS 4000, you receive an integrated solution for modern press brakes – with maximum productivity (see page 102).





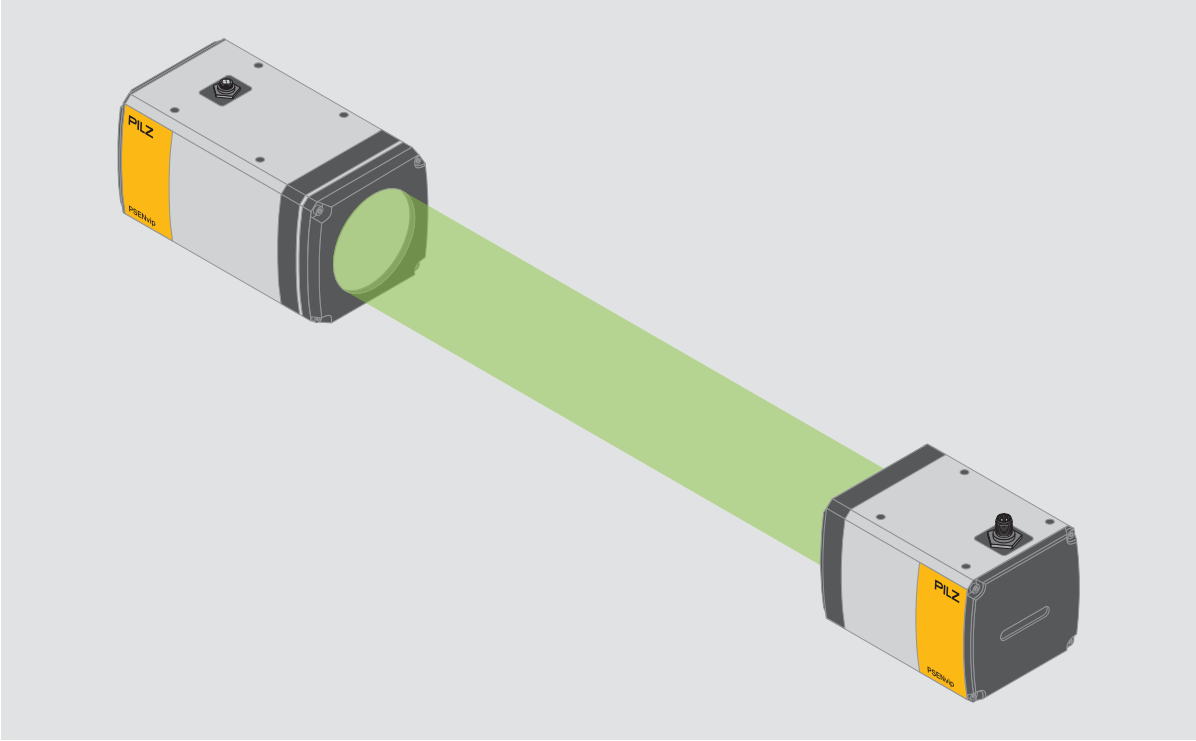

Safe view of bending processes with the camera-based protection systems PSENvip.

Innovative optical system for high productivity
The visible light beams are transmitted to the receiver via a telecentric lens (vision parallel). As a result, PSENvip provides high availability and therefore better productivity compared to laser-based systems. The long service life of the light source means reduced maintenance work.

Highly robust thanks to non-sensitive technology
PSENvip are insensitive to reflections and external/diffused light, as well as vibration and temperature stratification (e.g. due to heated tools). The longer service life of the light source reduces maintenance costs. As the light does not pose a hazard for the eyes, PSENvip provides a higher level of safety than conventional systems.

Fast, simple initial setup and tool change
Precision adjustment during initial setup and after tool change can be made quickly and simply thanks to the innovative technology and software. This reduces setup times to a minimum.

Keep up-to-date on the camera-based protection system PSENvip:

Webcode: web150415

Online information at www.pilz.com

Camera-based protection system PSENvip – the

The camera-based protection system PSENvip provides a safe, complete solution for press retrofits.
A renewal of CE certification is not necessary after a PSENvip retrofit.

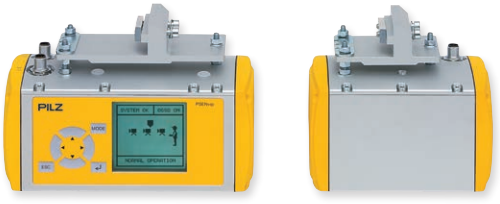

PSENvip RL D Set



PSENvip productive version in combination with the automation system PSS 4000

The mobile protection system PSENvip can be combined with the configurable safe small controllers PNOZmulti 2 or the automation system PSS 4000. When combined with the FAST Control Unit in the automation system PSS 4000, the productive version of PSENvip can achieve a productivity increase of up to 50 per cent during dynamic muting mode. In conjunction with descriptive diagnostic messages via the integrated LC display, it guarantees productive work practices in complete safety.

With proper installation and correct parameter setting of the PSENvip (both in the base version and the productive version with PSS 4000), no significant change has been made in terms of the Equipment and Product Safety Act. A renewal of CE certification is therefore not necessary after a PSENvip retrofit.

Type code for PSENvip

PSENvip RL D M Set

Product area Pilz **SEN**sors	Transmitter/ receiver	Display (receiver)	Version (receiver)	Scope
Product group vip – PSENvip	T Transmitter **RL Receiver, left**	**D With display**	**M With bending angle measurement** P Productive version _ Base version	**Set Unit comprising transmitter and receiver**
Operation Non-contact, optical, 2D (area monitoring)				

safe, complete solution for press retrofits

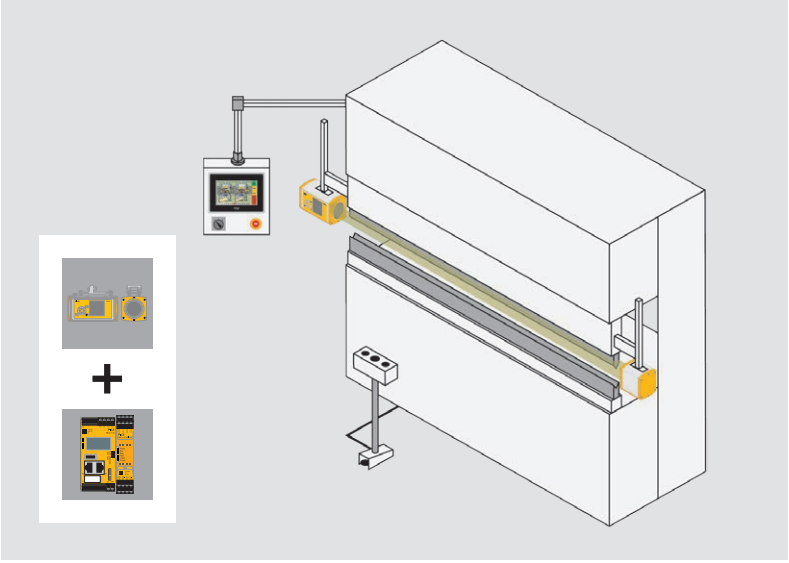

Your benefits at a glance

- Highest level of safety for press brakes in accordance with the most current safety standards and EN 12622
- Higher productivity and availability thanks to:
  - Innovative optical system
  - Tolerance to vibration, temperature stratification, reflection, external/ diffused light
- User-friendly:
  - Software-supported fine adjustment following tool change
  - User-friendly operation via integrated display

Components for your safe solution	Order number
Sensor: PSENvip RL D Set	583 000
Connection:	
▸ PSEN op cable, shielded, straight, M12, 4-pin, 5 m	630 304
▸ PSEN op cable, shielded, straight, M12, 8-pin, 5 m (2x)	630 314
▸ Evaluation device: base unit PNOZ m B1	772 101
▸ 2-pole semiconductor output module: PNOZ m EF 8DI2DOT	772 144

Safe and effective press braking with the base version: camera-based protection system PSENvip and configurable safe small controllers PNOZmulti 2.





Cable selection:

From page 138

Keep up-to-date on the camera-based protection system PSENvip:

Webcode: web150415

Online information at www.pilz.com

Camera-based protection system PSENvip 2 – The

The camera-based protection system PSENvip 2 provides an integrated solution for modern press brakes and is used with the PSS 4000.



PSENvip R E



PSSu H PLC1 FS SN SD

High productivity

Characteristics of the PSENvip 2, the second, extended generation of the camera-based protection system, include simple handling and maximum productivity, combined with high machine availability. The volume of the receiver has also been reduced by around 50 per cent. PSENvip 2 consists of a transmitter, receiver and an analysis unit integrated in the PSS 4000. The result: fastest shutdown time and shortest overrun distance for the press brake tool.

Simple configuration and commissioning

The PSENvip 2 does not need a device display: all of the commissioning and configuration work is carried out easily and directly via a web interface on the press brake controller. As a result, the user can make all the settings centrally in one place.

Safe monitoring of special purpose presses

With a range of up to 18 meters, the long-range version (LR) is ideal for monitoring tandem presses. The transmitter remains the same, only the receiver has to be swapped.

Type code for PSENvip 2

PSENvip R LR

Product area Pilz **SEN**sors	Transmitter/receiver	Range of receiver
Product group **vip – PSENvip**	E Transmitter **R Receiver**	_ Basic range (13 m) **LR Long range (18 m)**
Operation Non-contact, optical, 2D (area monitoring)		

integrated solution for modern press brakes

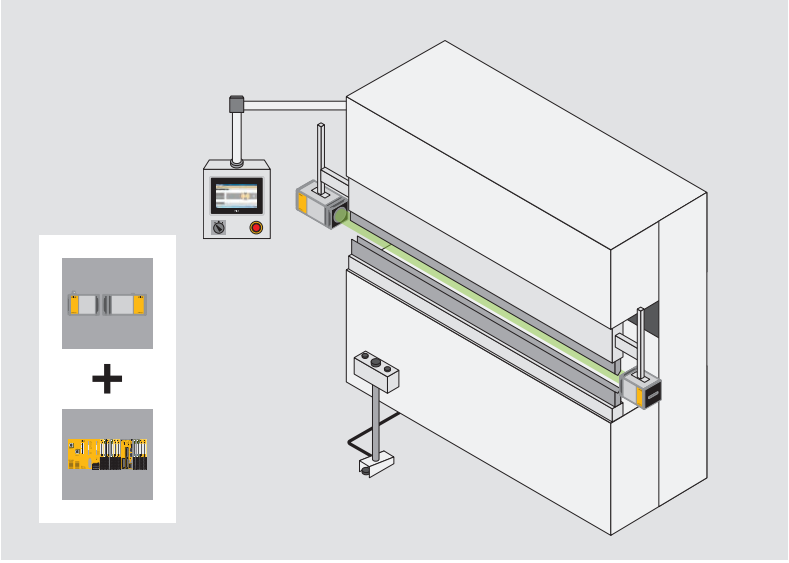

Components for your safe solution	Order number
Sensor:	
▸ PSENvip R	584100
▸ PSENvip E	584200
Connection:	
▸ PSEN op cable, shielded, straight, M12, 4-pin, 10 m	630305
▸ PSEN cable, M12-4sm MIOsm MOVE, 10 m	584570
Evaluation device:	
▸ PSSu H PLC1 FS SN SD	312070
▸ PSSu K F FAU P	312421
▸ Connector for FAU, 4-pin	313118
▸ Connector for FAU, 10-pin (2 pieces)	313115

Safe and productive press braking: camera-based protection system PSENvip 2 and automation system PSS 4000 with productive evaluation module.

Your benefits at a glance

- Highest level of safety for press brakes in accordance with the most current safety standards and EN 12622
- Maximum productivity and high machine availability:
  - Innovative optics
  - Cabling work reduced to a minimum
  - Ensuring the shortest shutdown time and the shortest overrun distance due to the Fast Analysis Unit
  - Tolerance to vibration, temperature stratification, reflection, external/ diffused light
- Simple handling thanks to
  - Flexible mounting on the right or left of the press brake
  - Settings performed centrally on the web interface on the press brake controller
  - Suitable for tandem presses thanks to detection zone of up to 18 m
  - Hot-plug capability



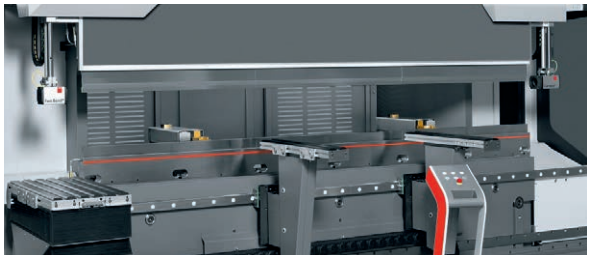

Cable selection:
From page 138

Keep up-to-date on the camera-based protection system PSENvip 2:
Webcode: web150415

Control system PSSuniversal PLC:
Webcode: web150420

Online information at www.pilz.com

Selection guide – PSENvip and PSENvip 2

Camera-based protection system PSENvip

Common features
- Detection zone:
  - Length: 0.1 … 10 m
  - Height: max. 20 mm
  - Width: 42 mm
- Reaction time: 4 ms
- Compliant and approved in accordance with EN 12622
- For use in applications up to
  - Type 4 in accordance with EN/IEC 61496-1/-2
  - PL e of EN ISO 13849-1
  - SIL CL 3 of EN/IEC 61508

Features of bending angle measurement
- Distance between workpiece (plate) and receiver: max. 1.5 m
- Sheet thickness: 2 … 4 mm
- Bending angle: 50 … 160°
- Temperature range (environment): +10 … +40 °C

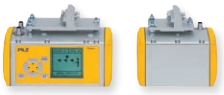

PSENvip RL D Set

Type
PSENvip RL D Set
PSENvip RL D
PSENvip RL D M Set
PSENvip RL D M
PSENvip RL D P Set
PSENvip RL D P
PSENvip T

Camera-based protection system PSENvip 2

Common features
- Detection zone:
  - Length: 0.1 … 18 m
  - Height: max. 20 mm
  - Width: 44 mm
- Reaction time: 4.65 ms (Sensor + FAU)
- Compliant and approved in accordance with EN 12622
- For use in applications up to
  - Type 4 in accordance with EN/IEC 61496-1/-2
  - PL e of EN ISO 13849-1
  - SIL CL 3 of EN/IEC 61508



PSENvip R



PSENvip E

Type
PSENvip R
PSENvip R LR
PSENvip E

Analysis unit for camera-based protection system PSENvip 2

Common features
- Compact module with failsafe
- 4 digital inputs
- Outputs:
  - 2 digital outputs, 1-pole, 2 A
  - 2 digital outputs, 2-pole, 2 A



PSSu K F FAU P

Type
PSSu K F FAU B
PSSu K F FAU P

Design	Transmitter	Receiver	Display	Certification	Order number
Base version set	◆	◆	◆	EAC, TÜV, UL [1]	583 000 [2]
Base version		◆	◆	EAC, TÜV, UL	583 600
Version with bending angle measurement set	◆	◆	◆	EAC, TÜV, UL [1]	583 002 [2]
Version with bending angle measurement		◆	◆	EAC, TÜV, UL	583 610
Productive version set	◆	◆	◆	EAC, TÜV, UL [1]	583 007 [2], [3]
Productive version		◆	◆	EAC, TÜV, UL	583 601 [3]
Transmitter	◆			EAC, TÜV, UL	583 900

[1] UL certification applies only to individual components contained within the set
[2] PSENvip (sets) include: transmitter, receiver, adjustment plates, adjustment templates with magnet and a test piece.
[3] Can be used in combination with the control system PSSuniversal PLC, PSSu K F FCU Fast Control Unit and 2 counter modules PSSu E F ABS SSI

Features	Range	Certification	Order number
PSENvip 2 receiver	13 m	EAC, TÜV, UL	584 100 [4]
PSENvip 2 receiver	18 m	EAC, TÜV, UL	584 101
PSENvip 2 transmitter	-	EAC, TÜV, UL	584 200 [4]

[4] Can be used in combination with the control system PSSuniversal PLC and the Fast Analysis Unit

Features	Certification	Order number
Fast Analysis Unit, base version	EAC, TÜV, UL	312 420
Fast Analysis Unit, productive version	TÜV, UL	312 421

Keep up-to-date on the camera-based protection systems PSENvip and PSENvip 2:

Webcode: web150415

Online information at www.pilz.com

Selection guide – Accessories PSENvip and PSEN

Accessories – camera-based protection systems PSENvip and PSENvip 2



PSENvip MS

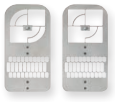

PSENvip AT mag



PSENvip TP



PSENvip AP 2



PSENvip AT spring mount

Description Type
Adapter plates **PSENvip MB**
Retaining arms **PSENvip MS**
Adjustment plates **PSENvip AP** **PSENvip AS2 R** **PSENvip AS2 E**
Adjustment templates **PSENvip AT mag** **PSENvip AT mech**
Test piece **PSENvip TP**
Mounting plates **PSENvip AS 2**
Adjustment plates **PSENvip AP 2**
Adjustment templates **PSENvip AT spring mount**

vip 2

Features	Quantity	Order number
To mount the PSENvip AP/PSENvip AP 2 on to any bracket, with slot	2	583 205
Retaining arms (set) for mounting PSENvip and PSENvip 2	2	583 206
For PSENvip, transmitter and receiver	2	583 202 [1]
For PSENvip 2 receiver	1	583 215
For PSENvip 2 transmitter	1	583 216
With magnet to align PSENvip and PSENvip 2 on a first-time installation	2	583 203 [1]
For mechanical mounting in the tool holder for the first installation of PSENvip and PSENvip 2	2	583 204
For regular function test, finger protection with PSENvip and PSENvip 2	1	583 200 [1]
For PSENvip 2 transmitter and receiver	2	583 210
For PSENvip 2 transmitter and receiver	2	583 211
To align PSENvip and PSENvip 2 on a first-time installation	2	583 207

[1] Included with the PSENvip (Set)

Keep up-to-date on the camera-based protection systems PSENvip and PSENvip 2:

Webcode: web150415

Online information at www.pilz.com

Collision measurement set PRMS for standard-compliant human-robot collaboration (HRC)

Robotics by Pilz

PRMS



Collision measurement set for recording force and pressure.

There is no such thing as a safe robot – but there are safe robot applications!

The Pilz Robot Measuring System PRMS is used in the context of validating human-robot collaboration (HRC) and serves to **measure force and pressure.** According to **ISO/TS 15066**, limit values in a possible collision must be taken into consideration in an HRC application without safety fences. If the application remains within these limits during contact between human and robot, it conforms to the standard. The relevant measurements are therefore required in every HRC application.

Comprehensive and **practical training** provides you with the necessary expertise for routine handling of the collision measurement set and the measurements. We offer two alternatives for PRMS: **purchase** or **rent** the measurement set to suit your needs.

The collision measurement set PRMS helps you achieve a safe robot application.





High-performance, standard-compliant HRC

With the HRC collision measurement set, you can measure the force and pressure in accordance with the normative requirements from ISO/TS 15066. And ensure safe, high-performance HRC.

Force measurement

The collision measurement set measures the forces exerted on the human body. The nine different springs have different spring force constants and are used in force measurement to simulate the individual body regions.

Pressure measurement

Pressure indicating films are used to measure the local pressure and compare it with the limit values specified from the standard. The three compression elements within the set simulate the respective body area and are placed under the pressure indicating films during the measurement.

Evaluation

A convenient software tool is available for validating and digitizing force and pressure measurements, and for generating test reports.

Measurement of force and pressure in accordance with ISO/TS 15066 – Force and maximum pressure development over time

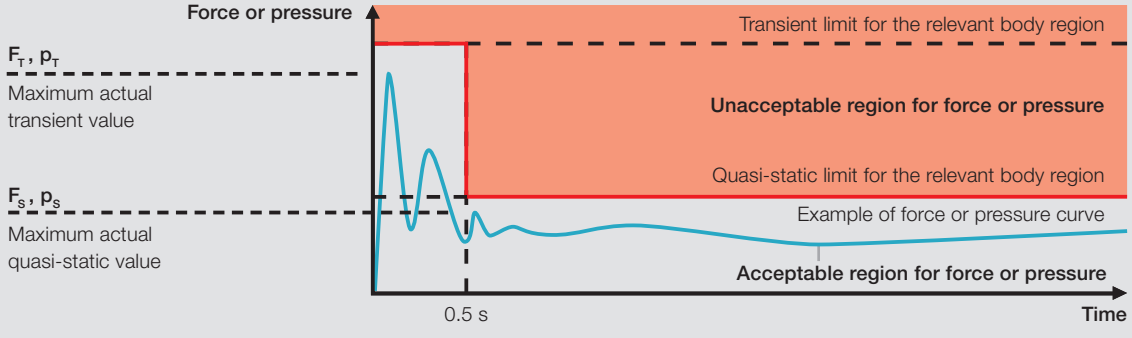



Keep up-to-date on the collision measurement set PRMS:

Webcode: web196478

Online information at www.pilz.com

Practical product training and after-sales package



Your benefits at a glance

- One day of practical product training
- Purchase or rent – to suit your individual needs
- Standard-compliant measurement of force and pressure
- Standardized measurement method
- Realistic evaluation of workstations
- Precise validation and practical application
- Cutting-edge product through regular calibration and updates
- High product availability and full functionality due to a sophisticated after-sales and customer support package
- Easy to use thanks to convenient measuring elements
- Software with protocol tools – for straightforward evaluation, visualization and documentation
- Long service life due to robust workmanship and high quality components
- Flexible adjustment to the most varied measurement tasks, e.g. through easily exchangeable springs

The collision measurement set includes one day of practical product training, with an introduction to the normative conditions for HRC and comprehensive training on the measuring procedure and components. Participants gain the necessary practical experience in handling the components and also benefit from our knowledge gathered from over 3000 HRC measurements.

A sophisticated after-sales package is also available, containing software updates in addition to the regular calibration. So the most current version of PRMS is always available to you.





Selection guide – Collision measurement set PRMS

Collision measurement set



PRMS Set

Type	Features	Order number
PRMS set	▸ PRMS set (purchase) ▸ PRMS set (rent) ▸ Dimensions (H x W x D) in mm: 120.3 x 120 x 120 ▸ Diameter of sensing face on cover: 50 mm ▸ Force measurement accuracy: 1 % of the maximum value (+/-5 N) ▸ Force measurement range: 0 to 500 N ▸ Operating temperature: 0 °C to 40 °C ▸ Service life: > 10^6 measurements ▸ Integrated electronics for measurement processing ▸ USB interface for connection to a PC **Contents of the collision measurement set:** ▸ Force measurement device ▸ Springs ▸ Pressure indicating films ▸ Compression elements ▸ Scanner for evaluation of pressure indicating films ▸ After-sales package (calibration, and software updates) ▸ Software tool and 1-day product training	9A000012 9A000018

The collision measurement set comes in a handy case for ease of transport.

Keep up-to-date on the collision measurement set PRMS:

Webcode: web196478

Online information at www.pilz.com

Control and signal devices

Selection of the correct control and signal devices is a key factor for the safety of human and machine. Pilz control and signal devices are therefore of use in all places that could pose dangerous situations for your staff. They may be used during the commissioning of your system and during regular operation, maintenance or service. We can provide E-STOP pushbuttons, hand-operated control devices, enabling switches and operating mode selection and access permission systems. Our products enable short reaction times and are therefore a safe component for your application!



E-STOP pushbuttons PITestop and PITestop active	114
Pushbutton unit PITgatebox	126
Operating mode selection and access permission system PITmode	130
Manually operated control device PITjog	134
Enabling switch PITenable	136



E-STOP pushbuttons PITestop and PITestop active

In accordance with the Machinery Directive, plant and machinery must be fitted with emergency stop equipment so that a hazard can be averted or reduced in the case of an emergency. That's why you should use the standard-compliant emergency stop pushbutton PITestop to shut down your system in a hazardous situation.



PITestop



PITestop active

Enhanced protection from the safety professionals

In a dangerous situation, emergency stop control devices are operated manually, triggering a signal to halt a potentially hazardous movement. With the emergency stop pushbuttons PITestop and PITestop active, Pilz offers you a comprehensive range of control devices for a variety of application scenarios.

Safe all over the world

Various standards and regulations are to be observed when using emergency stop pushbuttons. Compliance with several IEC and ISO standards is also relevant here in addition to the performance level and safety level of the devices. The standards EN/IEC 60947-5-1, EN/IEC 60947-5-5, EN ISO 13850 and IEC 60204 must be observed. PITestop command buttons can be used for applications up to SIL CL 3 of EN/IEC 62061 and PL e of EN ISO 13849-1 and also satisfy the requirements of UL and CE.

Contact block with monitoring

Pilz offers contact blocks with monitoring. “Self monitoring” is a N/O contact connected in series, which breaks the circuit in the event of a fault. This additional function provides a fast, safe solution for panel mount applications, at no extra cost.

Type code for PITestop

PIT es Set1s-5cs

Product area **P**ilz **T**aster (pushbutton)	Button	Inscription	Contacts	Connection type	Mounting
Product group	**1 Standard**	**s Symbol and logo**	_ Bare	_ Screw connection	_ Panel mounting
es E-STOP pushbutton	2 Large	u Uninscribed	1 N/C with monitoring	**c Spring-loaded terminal**	**s Surface mounting**
esc Emergency stop contact block	3 Illuminated		2 N/C	n Connector, M12, 5-pin	r Rail mounting
es Set Emergency stop set	4 Illuminated with protective collar		3 N/O		
ef Electronic failsafe	5 Protective collar		4 N/C / N/C / N/C / N/C [1]		
	6 Small		**5 N/C with monitoring / N/C**		
	7 Protection type IP6K9K		6 N/C with monitoring / N/C / N/O		
	8 Key				
	9 Standard without blocking protection collar				
	10 Illuminated active/inactive				

[1] Used for parallel operation of two machines

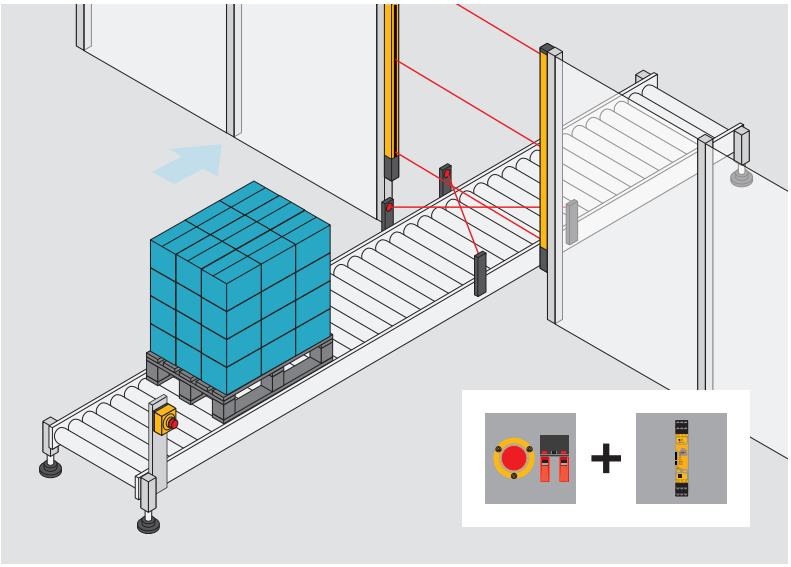

The optimum solution: emergency stop pushbutton PIT es Set1s-5c and safety relay PNOZ s3.

Push-in technology

Spring-loaded terminals (push-in technology) make PITestop easy to install and robust against vibration.

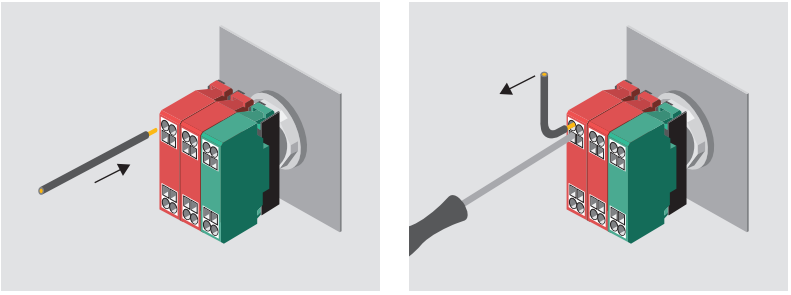

Reduce installation expense with quick-connect technology (push-in technology).

Your benefits at a glance

- Standard-compliant mushroom-type pushbutton for emergency stop
- A variety of emergency stop pushbuttons provide the highest level of safety in every situation: illuminated, with key, for hygiene environments (IP6K9K)
- Fast, easy assembly through panel and surface mount version as well as push-in technology
- Contact blocks and pushbuttons can be individually combined thanks to the modular structure
- Emergency stop symbol removes the need for additional labelling in the operator's language
- Enhanced operational safety thanks to the contact block with monitoring (panel mount version)

You can assemble modular emergency stop pushbuttons PITestop – example:

	PIT pushbutton	Contact block bracket	Contact block	Optional: Surface mount housing
				
Type	PIT es1s	PIT MHR 3	PIT esc1	PIT es box
Order number	400131	400330	400315	400200

Keep up-to-date on emergency stop pushbuttons PITestop and PITestop active:

Webcode: web150436

Online information at www.pilz.com

Electrically activated E-STOP pushbutton PITestop

The PITestop active control devices are the new generation of electrically activated E-STOP pushbuttons. The revision of the standards EN ISO 13850 and IEC 60204 enables this innovation in the emergency stop device sector.



PIT es10s (active)



PIT es Set10u-5ns (inactive)

The E-STOP pushbuttons PITestop active conform to the standards and offer the following innovations: they indicate by LED illumination when they are active. When inactive, however, they are not lit and therefore not identifiable as E-STOPs. So they are the perfect solution, in particular for modular plant and machinery in which plant modules can be removed or added. Inactive machine sections can be switched off to save time and energy – without the need to cover the inactive E-STOP pushbuttons. In order to guarantee the easiest and most flexible mounting, both a panel mount version as well as a surface mount version are available to you. Our new range of control devices PITestop active supports you with an innovative and flexible solution – and provides customized emergency stop pushbuttons for the smart factory!

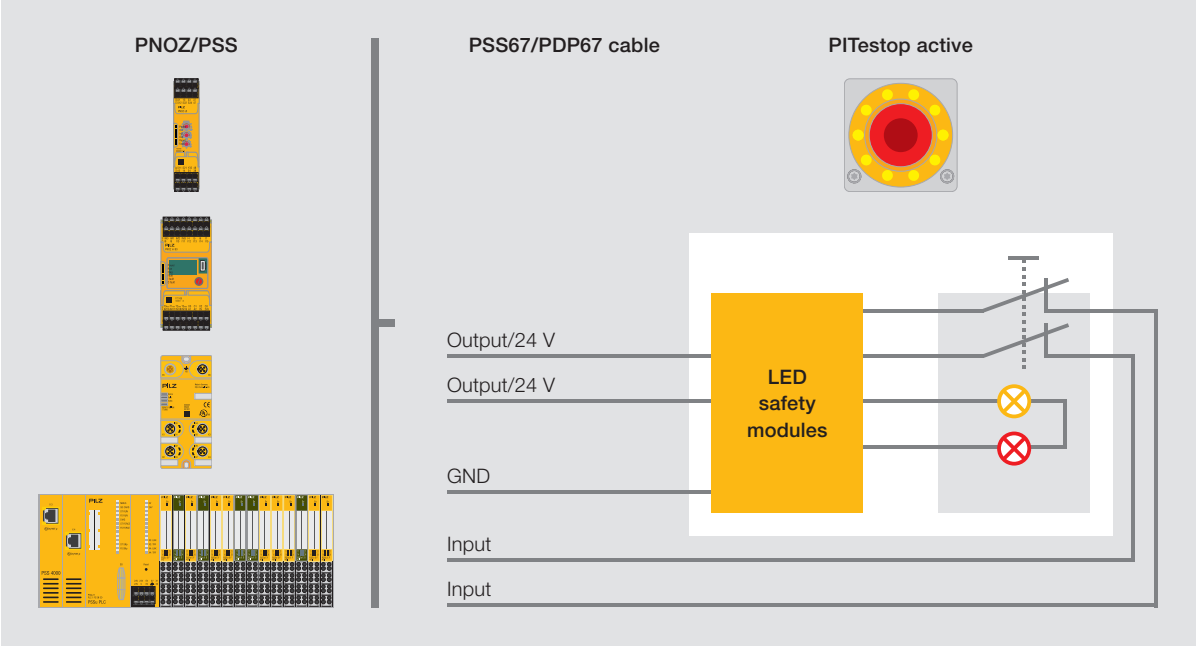

Application scenario – PITestop active.

active

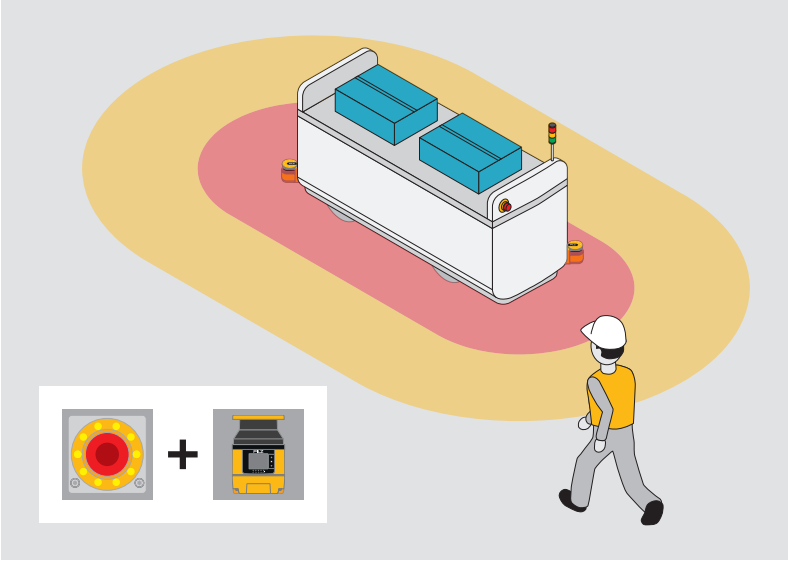

The optimum solution: E-STOP pushbutton PITestop active and safety laser scanner PSENscan.

Your benefits at a glance

- Standard-compliant E-STOP pushbuttons in accordance with the Machinery Directive
- E-STOP conforming to EN ISO 13850 and IEC 60204
- Electrically activated
- Indicates its status (active/inactive) through illumination
- No longer necessary to cover over inactive E-STOP pushbuttons
- Integrated solution to signal that the E-STOP pushbutton has been operated, by flashing
- Saving cost and time by switching off inactive machine parts
- Easier for user to handle, because active machine sections and operator devices are identified
- Simple, flexible installation thanks to panel and surface mount versions
- Increased flexibility as the operating mode on interlinked machines can be changed faster







Keep up-to-date on E-STOP pushbuttons PITestop active:

Webcode: web150436

Online information at www.pilz.com

Selection guide – PITestop and PITestop active

The choice is yours: pre-assembled sets or modular compilation.

Sets for panel mounting – E-STOP pushbuttons PITestop and PITestop active

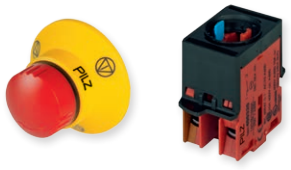

PIT es Set1s-5



PIT es Set3s-5c

Type	Components
PIT es Set1s-1	PIT es1s, PIT MHR3, PIT esc1
PIT es Set1s-1c	PIT es1s, PIT es holder3c, PIT esc1c
PIT es Set1s-5	PIT es1s, PIT MHR3, PIT esc1, PIT esc2
PIT es Set1s-5c	PIT es1s, PIT es holder3c, PIT esc1c, PIT esc2c
PIT es Set1s-6	PIT es1s, PIT MHR3, PIT esc1, PIT esc2, PIT esc3
PIT es Set1s-6c	PIT es1s, PIT es holder3c, PIT esc1c, PIT esc2c, PIT esc3c
PIT es Set2s-5	PIT es2s, PIT MHR3, PIT esc1, PIT esc2
PIT es Set2s-5c	PIT es2s, PIT es holder3c, PIT esc1c, PIT esc2c
PIT es Set3s-5	PIT es3s, PIT MHR3, PIT esc1, PIT esc2
PIT es Set3s-5c	PIT es3s, PIT es holder3c, PIT esc1c, PIT esc2c
PIT es Set5s-5	PIT es5s, PIT MHR3, PIT esc1, PIT esc2
PIT es Set5s-5c	PIT es5s, PIT es holder3c, PIT esc1c, PIT esc2c
PIT es Set6.1	PIT es6.10, PIT esb6.10, without monitoring
PIT es Set7u-5	PIT es7u, PIT MHR3, PIT esc1, PIT esc2
PIT es Set7u-5c	PIT es7u, PIT es holder3c, PIT esc1c, PIT esc2c
PIT es Set8s-5	PIT es8s, PIT MHR3, PIT esc1, PIT esc2
PIT es Set8s-5c	PIT es8s, PIT es holder3c, PIT esc1c, PIT esc2c
PIT es Set9u-5	PIT es9u, PIT MHR3, PIT esc1, PIT esc2
PIT es Set9u-5c	PIT es9u, PIT es holder 3c, PIT esc1c, PIT esc2c
PIT es Set9u-7	PIT es9u, PIT MHR3, PIT esc1, PIT esc2
PIT es Set10u-5c	PIT es10u, PIT es holder 3c, PIT esc1, PIT esc2, PIT ef LED

You can assemble modular emergency stop pushbuttons PITestop – example:

	PIT pushbutton	Contact block bracket	Contact block	Optional: surface mount housing
				
Type	PIT es1s	PIT MHR 3	PIT esc1	PIT es box
Order number	400131	400330	400315	400200

Contacts	Inscribed with emergency stop symbol and logo		Can be combined with surface mount housing	Certification	Order number	
	With	Without			Screw terminal	Spring-loaded terminal
1	◆		◆	EAC [1], TÜV [1], UL [1]	400430	-
1	◆		◆	EAC [1], TÜV [1], UL [1]	-	400431
1 1	◆		◆	EAC [1], TÜV [1], UL [1]	400432	-
1 1	◆		◆	EAC [1], TÜV [1], UL [1]	-	400433
1 1 2	◆		◆	EAC [1], TÜV [1], UL [1]	400445	-
1 1 2	◆		◆	EAC [1], TÜV [1], UL [1]	-	400446
1 1	◆		◆	EAC [1], TÜV [1], UL [1]	400434	-
1 1	◆		◆	EAC [1], TÜV [1], UL [1]	-	400435
1 1	◆		◆	EAC [1], TÜV [1], UL [1]	400436	-
1 1	◆		◆	EAC [1], TÜV [1], UL [1]	-	400437
1 1	◆		◆	EAC [1], TÜV [1], UL [1]	400438	-
1 1	◆		◆	EAC [1], TÜV [1], UL [1]	-	400439
1 1		◆		EAC [1], TÜV [1], UL [1]	400620	-
1 1		◆	◆	EAC [1], TÜV [1], UL [1]	400441	-
1 1		◆	◆	EAC [1], TÜV [1], UL [1]	-	400442
1 1	◆		◆	EAC [1], TÜV [1], UL [1]	400443	-
1 1	◆		◆	EAC [1], TÜV [1], UL [1]	-	400444
1 1		◆	◆	EAC [1], TÜV [1], UL [1]	400458	-
1 1		◆	◆	EAC [1], TÜV [1], UL [1]	-	400459
1 1 1		◆	◆	EAC [1], TÜV [1], UL [1]	400457	-
1 1		◆	◆	DGUV	-	400460

1 N/C, positive-opening

2 N/O, signal contact

[1] EAC, TÜV and UL certification applies only to individual components contained within the set

Keep up-to-date on emergency stop pushbuttons PITestop and PITestop active:

Webcode: web150436

Online information at www.pilz.com

Selection guide – PITestop and PITestop active

The choice is yours: pre-assembled sets or modular compilation.

Sets for surface mounting – E-STOP pushbuttons PITestop and PITestop active



PIT es Set1s-5s



PIT es Set6u-5nr

Type	Components
PIT es Set1s-5s	PIT es1s, PIT MHR3, PIT esc1, PIT esc2, PIT es box
PIT es Set1s-5cs	PIT es1s, PIT es holder3c, PIT esc1c, PIT esc2c, PIT es box
PIT es Set1s-5ns	PIT es1s, PIT MHR3, PIT esc1, PIT esc2, PIT es box
PIT es Set1s-6s	PIT es1s, PIT MHR3, PIT esc1, PIT esc2, PIT esc3, PIT es box
PIT es Set3s-5s	PIT es3s, PIT MHR3, PIT esc1, PIT esc2, PIT es box
PIT es Set3s-5ns	PIT es3s, PIT MHR3, PIT esc1, PIT esc2, PIT es box
PIT es Set5s-5s	PIT es5s, PIT MHR3, PIT esc1, PIT esc2, PIT es box
PIT es Set6u-5cr	Emergency stop, narrow surface mount housing for rail assembly
PIT es Set6u-5nr	Emergency stop, narrow surface mount housing for rail assembly
PIT es Set10u-5ns	PIT es10u, PIT es holder3c, PIT esc1, PIT esc2, PIT ef LED, PIT es box flex
PIT es Set10u-5ns AIDA	PIT es10u, PIT es holder3c, PIT esc1, PIT esc2, PIT ef LED, PIT es box flex

Contacts	Inscribed with emergency stop symbol and logo		Certification	Order number		
	With	Without		Screw terminal	Spring-loaded terminal	5-pin M12 connection
2	◆		UL [1]	400447	-	-
2	◆		UL [1]	-	400448	-
2	◆		UL [1]	-	-	400453
2 1	◆		UL [1]	400452	-	-
2	◆		UL [1]	400449	-	-
2	◆		UL [1]	-	-	400454
2	◆		UL [1]	400450	-	-
2		◆	UL [1]	-	400451	-
2		◆	UL [1]	-	-	400455
2		◆	-	-	-	400461
2		◆	-	-	-	400462

2 N/C, positive-opening

1 N/O, signal contact

[1] UL certification applies only to individual components contained within the set

Keep up-to-date on emergency stop pushbuttons PITestop and PITestop active:

Webcode: web150436

Online information at www.pilz.com

Technical details – PITestop and PITestop active

E-STOP pushbuttons PITestop and PITestop active

Common features

- Application range: EN/IEC 60947-5-1 and EN/IEC 60947-5-5
- Protection type: IP65; PIT es7u: IP6K9K
- Mounting hole: 22.3 mm
- 127 500 operations
- Connection options: connection to contact blocks of type PIT esc
- Dimensions: see dimensioned drawings
- Pushbutton color: red
- Twist to release: clockwise or counter clockwise; PIT es8s and PIT es8u: clockwise only



PIT es1s



PIT es3s



PIT es5s


PIT es6.10



PIT es8s


PIT es10u

Type
PIT es1s
PIT es1u
PIT es2s
PIT es2u
PIT es3s
PIT es3s-c
PIT es3u
PIT es3u-c
PIT es4s
PIT es4u
PIT es5s
PIT es5u
PIT es6.10
PIT es7u
PIT es8s
PIT es8u
PIT es9u
PIT es10u

Dimensions (mm)

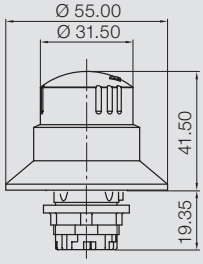

PIT es1s/PIT es1u

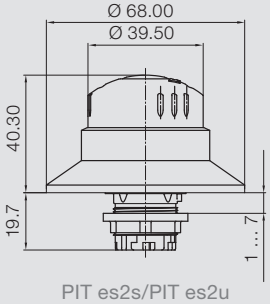

PIT es2s/PIT es2u

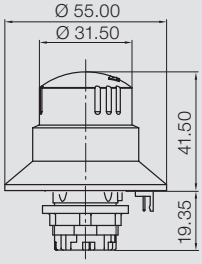

PIT es3s/PIT es3u

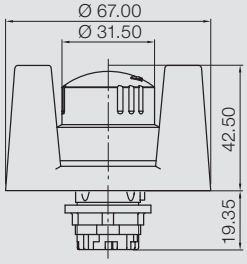

PIT es5s/PIT es5u

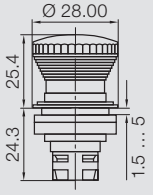

PIT es6.10

Pushbutton	Certification	Order number	
		Inscribed with emergency stop symbol and logo	
		With	Without
Standard	EAC, TÜV, UL	400131	-
Standard	EAC, TÜV, UL	-	400531
Large	EAC, TÜV, UL	400132	-
Large	EAC, TÜV, UL	-	400532
Illuminated, incl. contact block (screw terminal)	EAC, TÜV, UL	400133	-
Illuminated, incl. contact block (spring-loaded terminal)	EAC, TÜV, UL	400143	-
Illuminated, incl. contact block (screw terminal)	EAC, TÜV, UL	-	400533
Illuminated, incl. contact block (spring-loaded terminal)	EAC, TÜV, UL	-	400543
Illuminated with protective collar, incl. contact block (screw terminal)	EAC, TÜV, UL	400134	-
Illuminated with protective collar, incl. contact block (screw terminal)	EAC, TÜV, UL	-	400534
With protective collar	EAC, TÜV, UL	400135	-
With protective collar	EAC, TÜV, UL	-	400535
Small	EAC, TÜV, UL	-	400610
Protection type IP6K9K	EAC, TÜV, UL	-	400537
Key	EAC, TÜV, UL	400138	-
Key	EAC, TÜV, UL	-	400538
Standard without blocking protection collar	EAC, TÜV, UL	-	400539
Illuminated, active/inactive	DGUV	-	400540

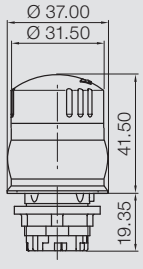

PIT es7u

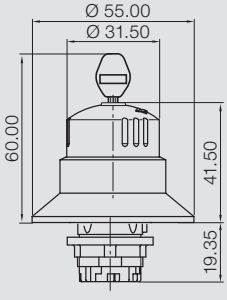

PIT es8s/PIT es8u

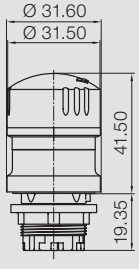

PIT es9u

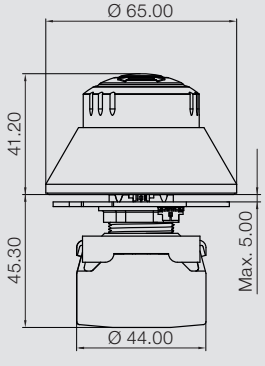

PIT es10u

Keep up-to-date on emergency stop pushbuttons PITestop and PITestop active:

Webcode: web150436

Online information at www.pilz.com

Technical details – PITestop and PITestop active

Contact blocks for panel and surface mounting – E-STOP pushbuttons PITestop and PITestop active

Common features

- Application range:
  SIL CL 1, 2 or 3 of EN/IEC 62061,
  PL c, d or e of EN ISO 13849-1,
  EN/IEC 60947-5-1
- Rated operating voltage U_e:
  250 VAC (3 A), 24 VDC (2 A)
- Connection:
  screw connections 2 x 2.5 mm², finger-proof in accordance with VBG 4
- Contact material: hard silver Ag/Ni
- Min. current:
  - 1 mA (screw terminals)
  - 5 mA (spring-loaded terminals)
- Min. voltage: 5 V
- Mounting type: panel mounting
- Mounting depth:
  - Screw terminals: 59 mm
  - Spring-loaded terminals: 52 mm



PIT esc1



PIT esc2c



PIT esc3



PIT esb6.10

Type
PIT esc1
PIT esc2
PIT esc3
PIT esc4
PIT esc1c
PIT esc2c
PIT esc3c
PIT esb6.10
PIT ef LED

Accessories – E-STOP pushbuttons PITestop and PITestop active



PIT es box



PIT es backplate symbol



PIT MHR3



PIT MHR5



PIT es holder3c

Type	Method
PIT es box	Surface mount housing for use in combination with PITestop pushbuttons and contact blocks
PIT MHR3	Contact block bracket for screw connections
PIT MHR5	
PIT es holder3c	Contact block bracket for spring-loaded connections
PIT es backplate symbol	Backplate with 3 emergency stop symbols
PIT es backplate language	Backplate with emergency stop text in 3 languages: English, French, German

PIT connected to safe control technology (examples)



PSEN ix1



PNOZ s3

Type	Method
PSEN ix1	Multiple interface for PIT es Set1s-5 (400432), for example
PNOZ s3	Safety relay PNOZsigma, e.g. for monitoring emergency stop pushbutton PIT es Set 3s-5 (400436)

Keep up-to-date on emergency stop pushbuttons PITestop and PITestop active:

Webcode: web150436

Online information at www.pilz.com

Method	Contacts	Certification	Order number	
			Screw terminal	Spring-loaded terminal
Contact block with monitoring		EAC, TÜV, UL	400315	-
Contact block		EAC, TÜV, UL	400320	-
Contact block		EAC, TÜV, UL	400310	-
4 contact blocks for operation of 2 parallel machines		EAC, TÜV, UL	400324	-
Contact block with monitoring		EAC, TÜV, UL	-	400316
Contact block		EAC, TÜV, UL	-	400321
Contact block		EAC, TÜV, UL	-	400311
Contact block		EAC, TÜV, UL	-	400360
LED safety module		DGUV	-	400342

N/C, positive-opening

N/O, signal contact

Features	Certification	Order number
Protection type: IP65, protection class: II, 2 perforated openings for the stuffing box connection, cable entry ISO 20 mm (PG 13.5), dimensions (H x W x D) in mm: 61.5 x 72 x 72, also available as a pre-assembled set (see page 120)	UL	400200
3 slots	EAC, TÜV, UL	400330
5 slots, max. 3 contact blocks [1] may be fitted to ensure protection against defeat	EAC, TÜV, UL	400340
3 slots	EAC, TÜV, UL	400331
Suitable for all pushbuttons except PIT es2 and PIT es5 – not suitable for the PIT es box and the narrow, surface mount housing	-	400334
Suitable for all pushbuttons except PIT es2 and PIT es5 – not suitable for the PIT es box and the narrow, surface mount housing	-	400335

[1] except PIT es4: 4 contact blocks

Features	Certification	Order number
▸ Connection of several emergency stop pushbuttons or safety switches to PNOZ safety relays ▸ Max. 13 PSEN ix1 can be connected in series ▸ Connection of max. 50 emergency stop pushbuttons ▸ Volt-free signal outputs to evaluate the switch status ▸ Connection via spring-loaded terminals	UL	535120
▸ 2 instantaneous safety contacts ▸ 1 semiconductor output ▸ Up to PL e/SIL CL 3 ▸ Single- and dual-channel wiring ▸ Detection of shorts across contacts ▸ Monitored/manual/automatic start ▸ Start-up testing ▸ Supply voltage 24 VDC ▸ Outputs: voltage/current/rating DC1: 24 V/6 A/150 W ▸ Dimensions (H x W x D) in mm: 98 x 17.5 x 120	CE, CCC, KOSHA, TÜV, UL	751103

Pushbutton unit PITgatebox – Easy operation of

The robust control unit with various combinations of pushbuttons, key switches and E-STOP pushbuttons gives you maximum flexibility for individual application in your safety gate system.



PIT gb LLLE



PIT gb CLLE y



PIT gb BLLE y



PIT gb KLLE y

Simple operating function meets premium quality and design

With the pushbutton unit PITgatebox you can easily and flexibly control safety gate switches and systems. Commands such as activate, stop or reset your plant or machinery can be controlled. Thanks to the slimline design, the robust control unit can be installed quickly and easily on standard profile systems. Each preconfigured version with various combinations of pushbuttons, key switches and E-STOP pushbuttons gives you maximum flexibility for your individual application.

Selection guide – Pushbutton unit PITgatebox

Type	PIT gb LLLE	PIT gb CLLE y	PIT gb BLLE y	PIT gb KLLE y
E-STOP pushbutton	2 N/C contacts	2 N/C contacts/ 1 N/O contact	2 N/C contacts/ 1 N/O contact	2 N/C contacts
Position 1	Illuminated pushbutton (1 N/O)	Illuminated pushbutton (1 N/O)	Illuminated pushbutton (1 N/O)	Illuminated pushbutton (1 N/O)
Position 2	Illuminated pushbutton (1 N/O)	Illuminated pushbutton (1 N/O)	Illuminated pushbutton (1 N/O)	Illuminated pushbutton (1 N/O)
Position 3	Illuminated pushbutton (1 N/O)	Cover	Key-operated pushbutton (1 N/C; 2 positions)	Key switch (2 N/C; 3 positions)
Order number	G1000001	G1000002	G1000003	G1000004

your safety gate system

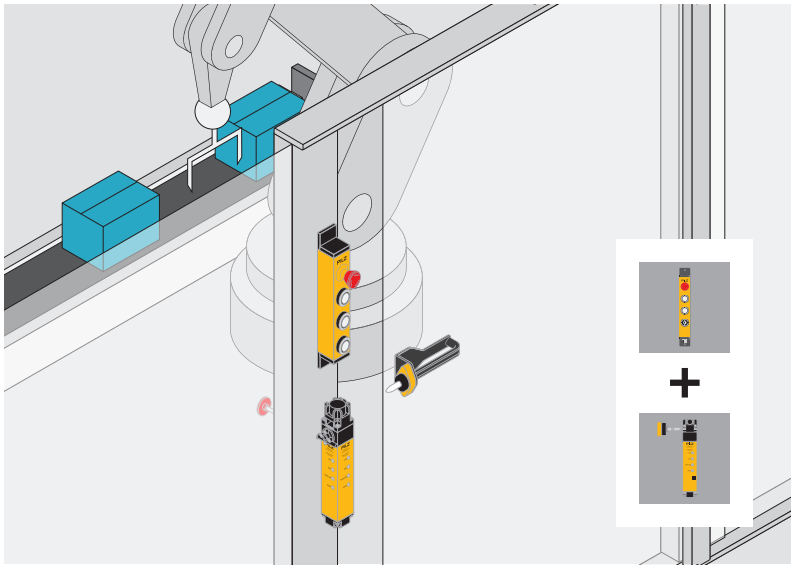

PITgatebox with PSENmlock, escape release and handle in modular safety gate system.

PITgatebox in modular safety gate system

The pushbutton unit PITgatebox can be ideally combined with the safety gate systems PSENslock and PSENmlock. Thanks to the numerous potential combinations, together with the pushbutton unit PITgatebox you receive a one-stop modular safety gate solution tailored to your individual needs. The modular safety gate system products are ideal for use with safe control technology from Pilz.

Your benefits at a glance

- Simple operating function meets premium quality and design
- High quality die cast zinc metal IP65 housing is highly robust to shock, vibration and collision
- Slimline housing for space-saving installation on standard aluminium profile systems
- Fast, simple installation, no wiring thanks to M12 12-pin connection and rotatable end caps
- Cost savings due to reduced wiring work
- Flexible installation thanks to integrated rotatable mounting bracket
- Easy to exchange the control elements thanks to compatible spare parts





Selection guide – Pushbutton unit PITgatebox

Selection guide – Pushbutton unit PITgatebox

Common features

- M12, 12-pin connection
- Robust zinc die cast housing
- Protection type: IP65
- Slimline design: 40 mm profile
- Rotatable end caps (– 90°, + 90°,+ 180°)
- Supply voltage: 24 VDC
- Ambient temperature: –20 … 60 °C



PIT gb CLLE y



PIT gb BLLE y

Type
PIT gb LLLE
PIT gb CLLE y
PIT gb BLLE y
PIT gb KLLE y

Accessories – Pushbutton unit PITgatebox



PIT gb es1



PIT gb
push button



PIT gb
key button

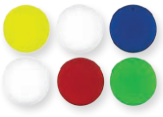

PIT gb
color covers

Type
PIT gb es1
PIT gb push button
PIT gb key button
PIT gb key switch
PIT gb color covers
PIT gb blind cover
PIT gb es2
PIT gb fixing spanner
PIT gb color cover wh s1
PIT gb color cover wh s2
PIT gb color cover wh s3
PIT gb color cover wh s4
PIT gb color cover bl s5
PIT gb color cover bl s6
PIT gb color cover bl s4

Technical features	Certification	Order number
Box with emergency stop (2 N/C) and 3 illuminated pushbuttons	CE, UL	G1000001
Box with emergency stop (2 N/C / 1 N/O) and 2 illuminated pushbuttons	CE, UL	G1000002
Box with emergency stop (2 N/C / 1 N/O) and 2 illuminated pushbuttons as well as 1 key-operated pushbutton (1 N/C)	CE, UL	G1000003
Box with emergency stop (2 N/C) and 2 illuminated pushbuttons as well as 1 key-operated pushbutton (2 N/C)	CE, UL	G1000004

Technical features	Certification	Order number
E-STOP pushbutton, turn to unlock	CCC, TÜV	G1000005
Pushbutton, illuminated, latching	CCC, TÜV	G1000006
Key-operated pushbutton 1 x 40°, latching	TÜV	G1000007
Key-operated pushbutton 2 x 90°, latching	TÜV	G1000008
Color discs for the illuminated pushbuttons	-	G1000009
Blind plug, IP65	-	G1000010
E-STOP pushbutton with signal contact, turn to unlock	CCC, TÜV	G1000011
Fixing spanner for threaded ring	-	G1000012
Color discs for the illuminated pushbuttons, white, IEC icon start, pack of 10	-	G1000013
Color discs for the illuminated pushbuttons, white, IEC icon ON, pack of 10	-	G1000014
Color discs for the illuminated pushbuttons, white, IEC icon unlocking, pack of 10	-	G1000015
Color discs for the illuminated pushbuttons, white, IEC icon locking, pack of 10	-	G1000016
Color discs for the illuminated pushbuttons, blue, IEC icon request, pack of 10	-	G1000017
Color discs for the illuminated pushbuttons, blue, IEC icon reset, pack of 10	-	G1000018
Color discs for the illuminated pushbuttons, blue, IEC icon locking, pack of 10	-	G1000019

Operating mode selection and access authoriza

The operating mode selection and access permission system PITmode combines safety and security functions in one system. The devices enable functionally safe operating mode selection control of access permissions on plant and machinery.



PITmode

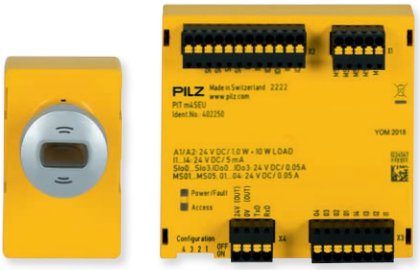

PITmode fusion



PITreader

PITmode devices can be used on plant and machinery in which it is necessary to switch between a range of control sequences and operating modes. Each employee can be issued machine enables and permissions that correspond to his or her skills using coded transponder keys with RFID technology. The safe evaluation unit detects the specified operating mode, e.g. automatic mode, manual access under restricted conditions or service mode, evaluates it and provides functionally safe switching. Incorrect operation and manipulation are thereby prevented and the human and machine are protected.

PITmode fusion –
The modular operating mode selection system
PITmode fusion is the modular version of the operating mode selection system. It comprises the reading unit PITreader with RFID technology and a separate safe evaluation unit (SEU). The transponder keys are read in and taught in the PITreader. The safe evaluation unit assesses the selected operating mode to provide functionally safe switching between up to five operating modes. PITmode fusion also allows implementation of the full scope of safe permission management.
By separating the components, PITmode fusion can be integrated flexibly into the design of existing control consoles and can be combined with existing pushbuttons.

PITreader – Regulates access permission
With PITreader you can implement tasks regarding access permissions for plant and machinery. The options range from a simple enable and authentication of specific machine component functions to a complex hierarchical permission matrix. PITreader with RFID technology is flexible as a standalone device or it can be used in conjunction with a Pilz controller. The transponder keys are available in a freely writable version and also with fixed, stored permissions. For manipulation protection, the RFID keys can be coded with PITreaders with company-specific programming.

PITmode – The compact all-in-one device
With the compact all-in-one device PITmode the pushbuttons for operating mode selection and the safe evaluation unit are integrated in one device. Operating mode and permission are displayed safely via LED.
The individual key coding prevents manipulation.
As an option, the operating mode selector switch is also available with pictograms for machine tools and thus ideally suited for international applications.

tion system PITmode

The benefits of the operating mode selection and access permission system PITmode

- Functionally safe switching of operating mode through self-monitoring
- Control of access permission
- High level of manipulation protection through company-specific coding
- PITmode offers a combination of operating mode selector switch and access permission in one compact unit
- PITmode fusion is the modular version of the operating mode selection and access permission system
- PITreader flexibly controls access permissions as a standalone device or in combination with a controller from Pilz

The benefits of the industrial RFID system PITreader at a glance

- 13.56 MHz RFID technology
- Ethernet interface: Modbus/TCP protocol
- 24 V output for signalling
- 22.5 mm standard mounting hole
- Integrated web server for configuration of PITreader and transponder keys
- Read/write and data storage on transponder keys
- Teaching in of transponder keys on the PITreader via coding
- Blocking/locking of data areas on the transponder keys
- Preinstalled group-based permission management
- Integrated user management
- Multicolor LED ring for user information

Selection guide – PITmode and PITreader

Type	PITmode	PITmode fusion	PITreader
Application	Functionally safe operating mode selection and access permission system up to PL d	Functionally safe operating mode selection and access permission system up to PL d	Access permission system
System	Compact all-in-one device	Modular system consisting of: ▸ PITreader – RFID reader ▸ Safe evaluation unit (SEU)	PITreader – RFID reader that can be combined with Pilz controller or third-party controller
Pushbutton	Integrated ▸ 2 or 4 pushbuttons ▸ Optionally with pictograms	3rd-party pushbutton	-
Safe evaluation unit (SEU)	Integrated	Modular, in separate device	-
Usage	Operation with Pilz or 3rd-party FS controller for operating mode selection and access permission	Operation with Pilz or 3rd-party FS controller for operating mode selection and access permission	Operation with Pilz or 3rd-party FS controller for access permission
Operating modes	Up to 5 safe operating modes	Up to 5 safe operating modes	-

Keep up-to-date on operating mode selector switches PITmode:

Webcode: web150439

Online information at www.pilz.com

Selection guide – PITmode

Operating mode selection and access permission system PITmode



PIT m3.2p machine tools pictogram



PIT m3 key2hq mode service



PITreader base unit



PIT m4SEU

Type	Technical features
PIT m3.2p	Operating mode selector switch: keys with digits
PIT m3.2p machine tools pictogram	Operating mode selector switch: keys with digits and pictograms for machine tools
PIT m3.3p	Operating mode selector switch: keys with digits
PIT m3.3p machine tools pictogram	Operating mode selector switch: keys with digits and pictograms for machine tools
PIT m3 key2 mode 1, 2, 3, 4	Transponder key
PIT m3 key2 mode service	Transponder key, service function
PIT m3 key2hq mode 1, 2, 3, 4	Transponder key, high quality
PIT m3 key2hq mode service	Transponder key, high quality, service function
PIT m3.1p terminal set spring load	Spring-loaded terminals
PIT m3.2p terminal set spring load	Spring-loaded terminals
PIT m3.2p screw terminal set angled	Screw terminals, angled
PIT m3.2p screw terminal set	Screw terminals, straight
PITmode fusion	Bundled authentication and functionally safe operating mode selection system
PITreader base unit	Authentication system via RFID reader, base unit
PITreader key adapter h	▸ 1 x PITreader key adapter horizontal ▸ 1 x nut
PITreader key adapter v	▸ 1 x PITreader key adapter vertical ▸ 1 x nut
PITreader connector spring load	Connector for RFID authentication system: PITreader (402 255)
PIT m4SEU	PITmode safe evaluation unit
PIT m4SEU terminal set spring load	Connector set for safe evaluation unit for operating mode selection: PIT m4SEU (402 250)
PITreader nut set	10 x nuts for PITreader key adapter
PITreader key ye g	GENERIC transponder key for PITreader, yellow plastic, freely configurable
PITreader key ye 1, 2, 3, 4, 5	Transponder key for PITreader, yellow plastic
PITreader key ye 5 service	Transponder key for PITreader, yellow plastic, authorization 5 = service function
PIT es wrench	PITestop installation wrench for PIT es pushbutton and PITreader

	Dimensions (H x W x D) in mm	Certification	Order number
	55 x 98 x 42.3	FCC, TÜV, UL	402230
	55 x 98 x 42.3	FCC, TÜV, UL	402231
	55 x 98 x 42.3	FCC, TÜV, UL	402240
	55 x 98 x 42.3	FCC, TÜV, UL	402241
▸ Permission 1 ▸ Permission 2 ▸ Permission 3 ▸ Permission 4	-	FCC, TÜV, UL	▸ 402281 ▸ 402282 ▸ 402283 ▸ 402284
	-	FCC, TÜV, UL	402285
▸ Permission 1 ▸ Permission 2 ▸ Permission 3 ▸ Permission 4	-	FCC, TÜV, UL	▸ 402291 ▸ 402292 ▸ 402293 ▸ 402294
	-	FCC, TÜV, UL	402295
1 set for PIT m3.1p	-	-	402301
1 set for PIT m3.2p	-	-	402302
1 set for PIT m3.2p	-	-	402303
1 set for PIT m3.2p	-	-	402305
▸ PITreader base unit (402255) ▸ PIT m4SEU (402250) ▸ PITreader key adapter h (402308) ▸ Connector set (402306)	72.5 x 45 x 45 [1]	CE, UL	402251
Required accessories: PITreader key adapter	72.5 x 45 x 35	CE, UL	402255
Required accessories for PITreader base unit (402255)	-	CE, UL	402308
Required accessories for PITreader base unit (402255)	-	CE, UL	402309
Comprising 1 x 5-pin female connector strip in spring force version, straight cable outlet	-	CE, UL	402307
	90.5 x 90 x 25	CE, TÜV, UL	402250
Comprising 1 x 4-pin, 1 x 5-pin, 1 x 8-pin and 1 x 12-pin female connector strip in spring force version, straight cable outlet	-	CE, UL	402306
	-	CE, UL	402310
	-	CE, UL	402260
▸ Permission 1 ▸ Permission 2 ▸ Permission 3 ▸ Permission 4 ▸ Permission 5	-	CE, UL	▸ 402261 ▸ 402262 ▸ 402263 ▸ 402264 ▸ 402265
	-	CE, UL	402269
	-	-	400222

[1] Mounting depth to the face of the front plate

Keep up-to-date on operating mode selector switches PITmode:

Webcode: web150439

Online information at www.pilz.com

Manually operated control device PITjog

The manually operated control device PITjog can be used as an enabling switch. For example it is used when processes within the plant or machine's danger zone are being monitored while the safety gate is open.



PIT js2

Safe within the danger zone

In contrast to a conventional enabling switch, both hands are required to operate the PITjog. Access to the danger zone using one hand, whether by carelessness or accident, is prevented. Additional protection measures may be required depending on the result of the risk analysis.

The complete solution

Add the final touch to your solution! Allow staff to work safely within the danger zone of your plant or machine in conjunction with approved evaluation devices from Pilz:

- Two-hand control devices P2HZ
- Safety relay PNOZ s6
- Safety relay PNOZ e2.1p
- Two-hand module from the configurable safe small controllers PNOZmulti 2
- Control systems of the automation system PSS 4000

Selection guide – manually operated control device PITjog



PIT js holder

Type	Method	Operating voltage	Ambient temperature	Protection type
PIT js2	Manually operated control device	24 VAC/DC	-10 °C … +55 °C	IP50
PIT js holder	Wall holder for PIT js2	-	-	-



The optimum solution: two-hand monitoring with the manually operated control device PITjog and the safety relay PNOZ s6.

Dimensions (mm)

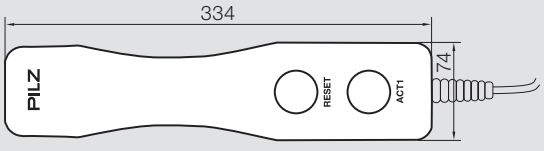



Dimensions (H x W x D) in mm	Housing material	Coiled cable		Order number
		Length	Length, stretched	
334 x 74 x 60	PC-ABS blend UL 94V0	1 m	4 m	401 100
310 x 83 x 71.5	Rust-proof steel	-	-	401 200

Keep up-to-date on the manually operated control device PITjog:

Webcode: web150437

Online information at www.pilz.com

Enabling switch PITenable

Safe setup and maintenance with one hand – the enabling switch PITenable is a manually operated control device. It is used when working inside the danger zone of a plant or machine, when the effect of the safeguard has to be suspended, e.g. during setup or maintenance. The three stages allow the PITenable to be operated with one hand.



PIT en1.0p-5m-s

Three-fold safe enabling, off-on-off

It is operated in three stages: in stage 1, the switch is not operated. The machine runs with the safety functions activated. Stage 2 activates the enabling function; the switch is in its middle setting. The machine runs while the protective effect of the movable guards is suspended. Stage 3 is a protective function which brings the machine to a standstill if the switch is suddenly released or fully depressed. This function protects the operator, should he overreact in a shock situation.

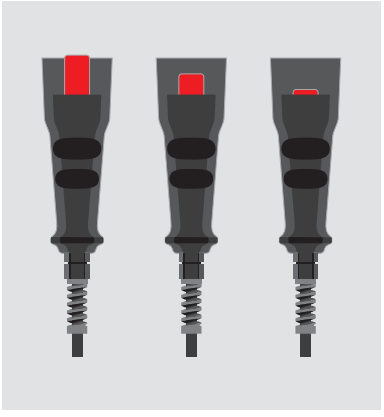

3-stage enabling switch: off-on-off





Selection guide – enabling switch PITenable



PIT en1.0

Type	Method	Connection
PIT en1.0p-5m-s	Enabling switch, 3-stage	Connector, M12, 5-pin
PIT en1.1a-5m-s	Enabling switch, 3-stage	Open coiled cable
PIT en1.0a-5m-s	Enabling switch, 3-stage	Open cable
PIT en1.0 holder	Wall holder for PIT en	

Safety with the approved all-in-one solution: to evaluate the PITenable, Pilz provides the configurable safe small controllers PNOZmulti 2 and the control systems of the automation system PSS 4000.

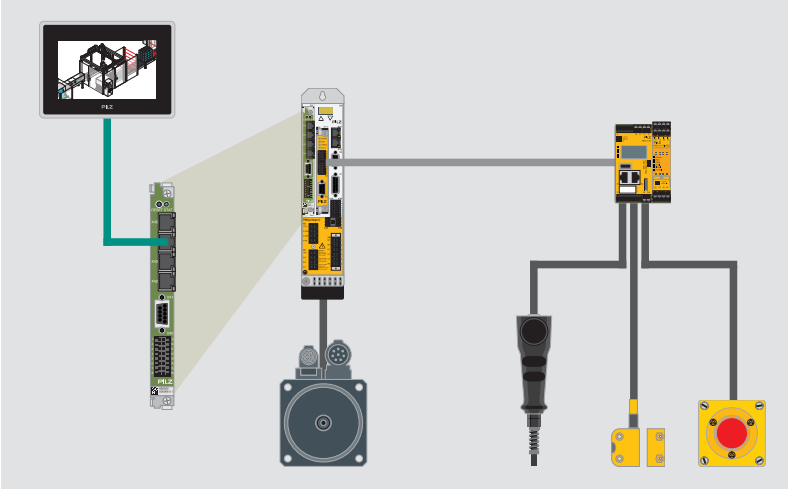

The safe, all-in-one solution with safe control and drive technologies.

Your benefits at a glance

- Ability to work safely inside a plant or machine's danger zone
- Easy to monitor processes with the safety gate open
- Flexible one-handed operation thanks to 3-stage enabling switch
- Operator is protected should he overreact with shock or panic
- Ergonomically moulded housing for comfortable operation
- Maintenance-free

Dimensions (mm)

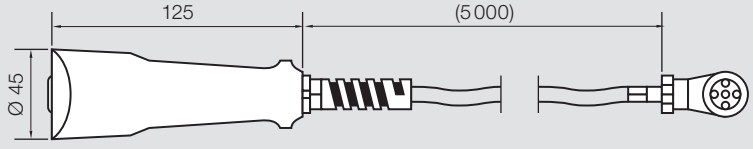

Technical features	Order number
Color: black	401110
Operating temperature: 0 °C … 50 °C	401112
Front protection type: IP65	401111
Electrical life: min. 100000 cycles	401201
Operating voltage/current: 125 VAC/0.3 A or 30 VDC/0.7 A	
Housing material: polypropylene	
Length of connection cable: 5 m	
Safety-related characteristic data: B_{10d} 100000 operations	

Keep up-to-date on enabling switch PITenable:

Webcode: web150440

Online information at www.pilz.com

Cable accessories for PSEN sensor technology

We offer not only a comprehensive portfolio of safety sensors, but also a variety of compatible cable accessories and decentralized modules. These make it possible for you to enjoy the expanded functionalities as well as series connection of our Pilz products. Select the appropriate cable accessories to meet your requirements and assemble your own individual system solution.

Decentralized modules PDP67	140
Overview of cable accessories	142
Cables for PSENcode and PSENslock	144
Cables for PSENmech, PSENrope and PSENmag	148
Cables for PSENhinge	152
Cables for PSENmlock	154
Cables for PSENopt and PSENopt II	156
Cables for PSENopt Advanced	160
Cables for PSENopt slim and PSENscan	162
Cables for PSENvip and cable accessories PSEN	164



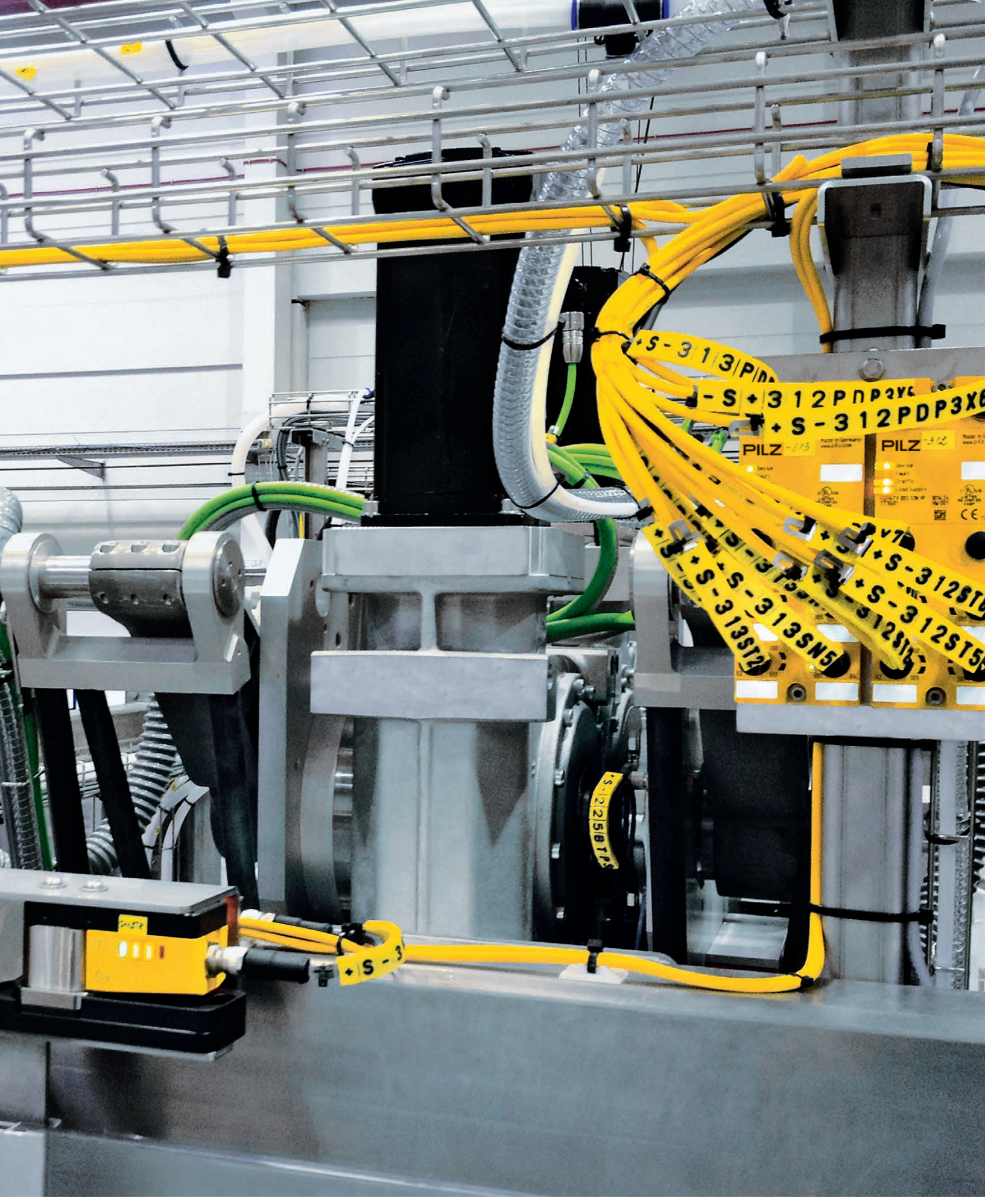
PILZ
PILZ

Decentralized modules PDP67

With the PDP67 modules you can achieve a high level of decentralization. The digital input module PDP67 F 8DI ION forwards signals from the sensors connected decentrally in the field to various evaluation devices, e.g. the configurable safe small controllers PNOZmulti 2. Up to 64 sensors can be connected.



PDP67 F 8DI ION



PDP67 F 4 code

Decentralized and passive – decentralized safety

The passive junction PDP67 F 4 code enables the connection of up to four sensors PSENslock. As well as the ability to connect to the configurable safe small controllers PNOZmulti 2, the safety relays PNOZsigma are also available.

Versatile automation architectures are possible due to the possibility of connection to various evaluation devices.

PDP67 – Economical and safe

Integrated into dirt and water-repellent IP67 housings, the PDP67 modules can even be used where there are high demands on hygiene. The decentralized modules optimize the installation and wiring effort – saving you time, money and space in the control cabinet. PDP67 modules with stainless steel threads satisfy the requirements of the food industry.

Type code for decentralized modules PDP67

PDP67 F 8DI ION HP VA

Product area Control technology	Design	Function	Number of inputs	Technology type	Variant	Material
P Product range **D** Decentralized **P** Periphery	**67** To protection class IP67	**F** Failsafe	**8DI** 8 digital inputs 4 4 digital inputs	**ION** I/Onet p code PSENcode	**HP** High power	**VA** With stainless steel elements PT Overmolded variant with plastic thread

Keep up-to-date on decentralized modules PDP67:

Webcode: web150510

Online information at www.pilz.com

DESIGN AWARD 2017



PDP67 F 8DI ION PT

New decentralized input module PDP67 F 8DI ION PT

Thanks to an improved manufacturing process, the new decentralized input module is a cost-effective alternative to existing solutions on the market. This new addition to the range of Pilz decentralized field devices allows modular machine concepts to be planned and implemented with ease.

Your benefits at a glance

- Less planning and design work thanks to simple installation
- Simple implementation of a modular machine concept
- Saving space in control cabinet
- Integrated in dirt and water-repellent housings
- Can be used for applications with high demands on hygiene

Technical details – modules for alternative connection options for sensors



PDP67 F 8DI ION



PDP67 Connector cs

Type	Features	Safety	Certification	Order number
PDP67 F 8DI ION	Decentralized input module for the configurable safe small controllers PNOZmulti 2	▸ PL e of EN ISO 13849-1 ▸ SIL CL 3 of EN/IEC 62061	DGUV, TÜV, UL	773600
PDP67 F 8DI ION VA			DGUV, TÜV, UL	773614
PDP67 F 8DI ION PT			DGUV, TÜV [1]	773616
PDP67 F 8DI ION HP	Decentralized input module for ▸ Configurable safe small controllers PNOZmulti 2 ▸ High power ▸ Additional supply voltage for PSENslock and PSENopt		DGUV, TÜV, UL	773601
PDP67 F 8DI ION HP VA			DGUV, TÜV, UL	773615
PDP67 F 4 code	Passive junction PSENcode		UL	773603
PDP67 F 4 code VA			UL	773613
PDP67 Connector cs	Adapter for connection cable to the evaluation device	-	-	773610
PDP67 Connector cs VA			-	773612

[1] Product labelling for the North American market is currently in preparation

Cable accessories for sensor technology PSEN®

Safe, complete solutions

The sensor technology PSEN product area includes an extensive portfolio of accessories in addition to devices for position monitoring, safety switches, safety gate systems, light curtains and safe camera systems.

Pilz products can be connected in series and are compatible with products and interfaces from other manufacturers. They fit perfectly into your plant environment and also enable Pilz components to be retrofitted to your plant.

Select the appropriate accessories to meet your requirements and assemble your own individual system solution.

Sensor technology PSEN connected directly

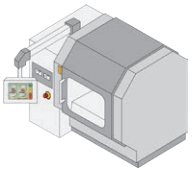

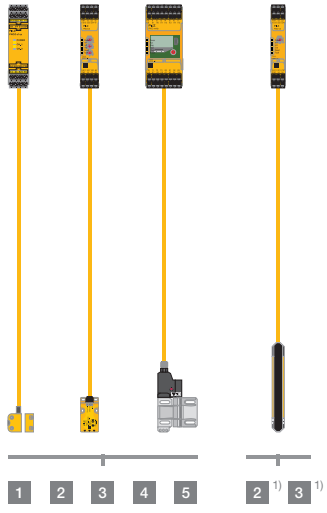

1) Also available as a shielded version

Sensor technology PSEN with integrated option for series connection and M8, 8-pin connection

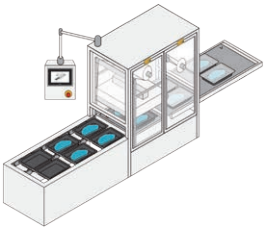

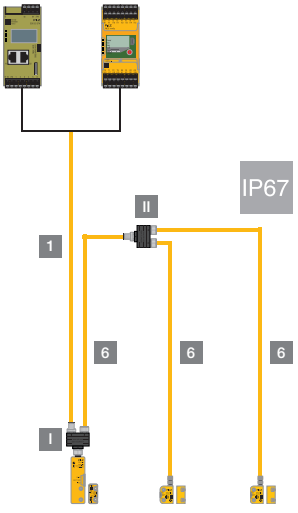

1 M8, 8-pin, socket, straight/angled, open-ended (pages 144, 148)

2 M12, 8-pin, socket, straight/angled, open-ended (pages 144, 148, 156)

3 M12, 5-pin, socket, straight/angled, open-ended (pages 144, 148, 152, 156)

4 M8, 4-pin, socket, straight/angled, open-ended (page 148)

5 M12, 4-pin, socket, straight, open-ended (pages 152, 156)

6 M8, 8-pin, socket, plug, straight (page 144)

Type code for cable accessories

PSEN cable M8-8sf

Product area Pilz **SEN**sors	Thread diameter	Number of pins	Connector design	Connector type
Cable	**M8 8 mm** M12 12 mm	4 4-pin 5 5-pin **8 8-pin**	**s Straight** a Angled	m Pin connector (male) **f Socket (female)**

Sensor technology PSEN with integrated option for series connection and M12, 8-pin connection

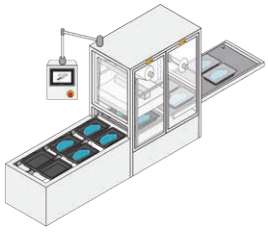

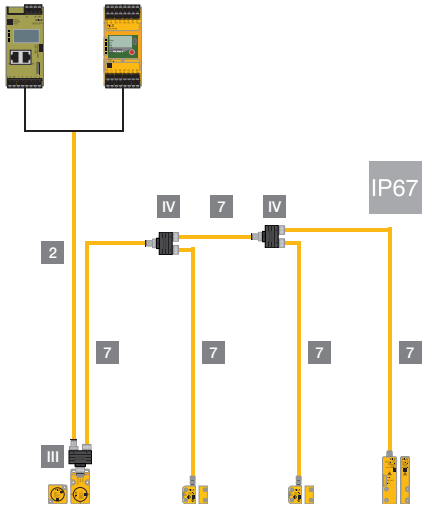

For connecting
to the PDP67 F4 code: 7 12

Sensor technology PSEN with M12, 5-pin connector (n-type) for PDP67 F 8DI ION and PNOZmulti 2

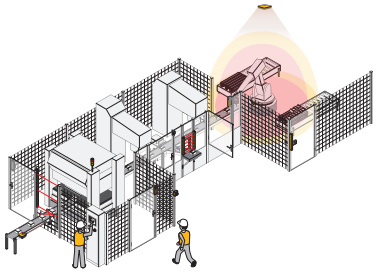

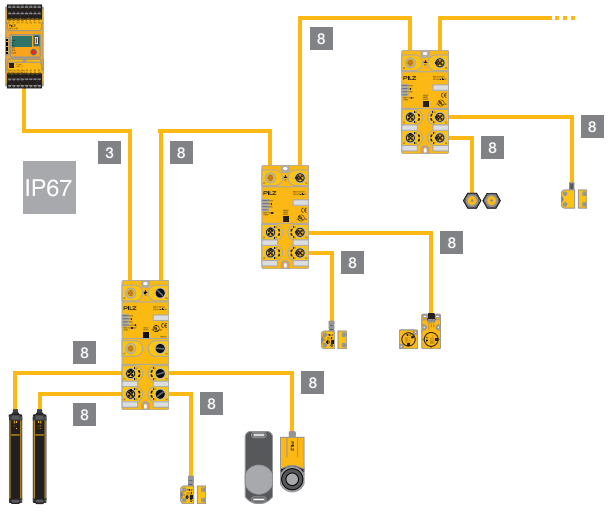

For the connection of p-type sensors,
the respective adapters are also required: 9 10 11

7 M12, 8-pin, socket, plug, straight (pages 144, 146)

8 M12, 5-pin, socket, plug, straight/angled (pages 146, 150, 152, 158)

9 PSEN ma adapter (pages 150, 152)

10 PSEN cs adapter (page 146)

11 PSEN sl adapter (page 146)

12 PSS67/PDP67 cable M12-8sm (page 146)

I PSEN Y junction M8 SENSOR (page 144)

II PSEN Y junction M8 cable channel (page 144)

III PSEN Y junction M12 SENSOR (page 144)

IV PSEN Y junction M12 cable channel (page 144)







Selection guide – Cable for PSENcode and PSEN



PSENcode



PSENslock

PSENcode and PSENslock – cable selection for connection to any evaluation device



PSEN cable M8-8sf

	Type	Description	Cable drag chain capability
1	PSEN cable M8-8sf	Cable for connection to any evaluation device	-
2	PSEN cable M12-8sf		◆
2	PSEN cable M12-8af		◆
3	PSEN cable M12-5sf		-
3	PSEN cable M12-5af		-

PSENcode and PSENslock – cable selection for series connection



PSEN Y junction M8-M12/M12 PIGTAIL



PSEN cable M8-8sf M8-8sm



PSEN Y junction M12 cable channel



PSEN Y junction M8 SENSOR

	Type	Description
	PSEN Y junction M8-M12/M12 PIGTAIL	Y-connector with pigtail
	PSEN Y junction M12-M12/M12 PIGTAIL	Y-connector with pigtail
	PSEN T junction M12	Diagnostic connector
6	PSEN cable M8-8sf M8-8sm	Extension cable
6	PSEN cable M8-8sf M8-8sm	Extension cable
6	PSEN cable M8-8sf M8-8sm	Extension cable
7	PSEN cable M12-8sf M12-8sm	Cable
III	PSEN Y junction M12 SENSOR	Y-connector
IV	PSEN Y junction M12 cable channel	Y-connector
I	PSEN Y junction M8 SENSOR	Y-connector
II	PSEN Y junction M8 cable channel	Y-connector
	PSEN converter M8-8sf- M12-8sm	Adapter
	PSEN ix2 F4 code	Multiple interface IP20
	PSEN ix2 F8 code	Multiple interface IP20

slock

Features	Certification	Order number (by length)					
		2 m	3 m	5 m	10 m	20 m	30 m
▸ Connection 1: straight, M8, 8-pin, socket ▸ Connection 2: open cable	UL	533150	-	533151	533152	533153	533154
▸ Connection 1: straight, M12, 8-pin, socket ▸ Connection 2: open cable	UL	-	540319	540320	540321	540333	540326
▸ Connection 1: angled, M12, 8-pin, socket ▸ Connection 2: open cable	UL	-	540322	540323	540324	-	540325
▸ Connection 1: straight, M12, 5-pin, socket ▸ Connection 2: open cable	UL	-	630310	630311	630312	630298	630297
▸ Connection 1: angled, M12, 5-pin, socket ▸ Connection 2: open cable	UL	-	630347	630348	630349	-	630350

Features	Order number
Y-connector for PSENcode; input socket in M8, 8-pin and output plug (2 x) in M12, 8-pin	540337
Y-connector for PSENcode; input socket and output plug (2 x) in M12, 8-pin	540338
▸ When not using Safety Device Diagnostics ▸ PSENcode, PSENslock: Signal output ▸ PSENslock: Lock signal	540331
0.5 m, straight, M8, 8-pin, socket/plug	533155
1 m, straight, M8, 8-pin, socket/plug	533156
2 m, straight, M8, 8-pin, socket/plug	533157
5 m (see table below for additional cable lengths)	540341
Y-connector for PSENcode for direct connection to sensor; input socket, output socket and output plug in M12, 8-pin	540315
Y-connector for PSENcode for cable outlet in the cable duct; input plug and output sockets in M12, 8-pin	540316
Y-connector for PSENcode for direct connection to sensor; input socket, output socket and output plug in M8, 8-pin	540317
Y-connector for PSENcode for cable outlet in the cable duct; input plug and output sockets in M8, 8-pin	540318
Converter-adapter for PSEN with M8, 8-pin to M12, 8-pin	540329
For up to 4 sensors	535111
For up to 8 sensors	535112

Selection guide – Cable for PSENcode and PSEN



PSENcode



PSENslock

PSENcode and PSENslock – cable selection for connection to PDP67 F 4 code



PSEN cable M12-8sf



PDP67 F 4 code

	Type	Description	Cable drag chain capability
7	**PSEN cable M12-8sf M12-8sm**	Cable for connection to PDP67 F 4 code	◆
12	**PSS67/PDP67 cable M12-8sm**	Cable for connection to any evaluation device	◆

Type	Description
PDP67 F 4 code	Passive junction for PSENcode
PSEN converter M8-8sf- M12-8sm	Adapter

PSENcode and PSENslock – cable selection for connection to PDP67 F 8DI ION/PSS67



PSS67/PDP67 cable M12-5sf



PDP67 F 8DI ION PT

	Type	Description	Cable drag chain capability
8	**PSS67/PDP67 cable M12-5sf M12-5sm**	Cable for connection to PDP67 F 8DI ION/PSS67	-
8	**PSS67/PDP67 cable M12-5af M12-5am**		-

Type	Description
PDP67 F 8DI ION PT	Sensor junction box for decentralized periphery PNOZmulti
PDP67 F 8DI ION VA	Sensor junction box for decentralized periphery PNOZmulti with M12 thread in stainless steel

	Type	Description
8	**PDP67 cable M12-5sf M12-5sm**	Extension cable
10	**PSEN cs adapter**	Adapter for connecting a PSEN cs to PSS67 and PDP67
11	**PSEN sl adapter**	Adapter for connecting an 8-pin PSENslock to a PDP67 with M12, 5-pin connections

slock

Features	Certification	Order number (by length)				
		2 m	5 m	10 m	20 m	30 m
▸ Connection 1: straight, M12, 8-pin, socket ▸ Connection 2: Straight, M12, 8-pin, plug	UL	540340	540341	540342	540343	540344
▸ Connection 1: Straight, M12, 8-pin, plug ▸ Connection 2: open cable	UL	380700	380701	380702	380703	380704

Features	Certification	Order number
▸ Multiple interface PDP67, protection type IP67 ▸ Series connection up to PL e of EN ISO 13849-1, SIL CL 3 of EN/IEC 62061	UL	773603
Converter-adapter for PSEN with M8, 8-pin to M12, 8-pin	UL	540329

Features	Certification	Order number (by length)				
		3 m	5 m	10 m	20 m	30 m
▸ Connection 1: straight, M12, 5-pin, socket ▸ Connection 2: Straight, M12, 5-pin, plug	UL	380208	380209	380210	380220	380211
▸ Connection 1: Angled, M12, 5-pin, socket ▸ Connection 2: Angled, M12, 5-pin, plug	UL	380212	380213	380214	-	380215

Features	Certification	Order number
Multiple interface PDP67, protection type IP67, PL e of EN ISO 13849-1, SIL CL 3 of EN/IEC 62061	DGUV, TÜV, UL	773616
Multiple interface PDP67, protection type IP67, PL e of EN ISO 13849-1, SIL CL 3 of EN/IEC 62061	DGUV, TÜV, UL	773614

Features	Certification	Order number
0.5 m, straight, 5-pin, socket/plug	UL	380710
1 m, straight, 5-pin, plug/socket	UL	380712
1.5 m, straight, 5-pin, plug/socket	UL	380711
2 m, straight, 5-pin, plug/socket	UL	380713
0.10 m: ▸ Connection 1: M12, 8-pin, female connector, straight ▸ Connection 2: M12, 5-pin, male connector, straight	-	380301
0.10 m: ▸ Connection 1: M12, 8-pin, female connector, straight ▸ Connection 2: M12, 5-pin, male connector, straight	-	380325

Selection guide – Cable for PSENmech, PSENrope



PSENmech



PSENrope



PSENmag



PSENmag

PSENmech and PSENrope – cable selection for connection to PDP67 F 8DI ION/PSS67



PSS67/PDP67 cable

Type	Description	Cable drag chain capability
PSS67/PDP67 cable	Cable for connection to PDP67 F 8DI ION/PSS67	-



PDP67 F 8DI ION PT

Type	Description
PDP67 F 8DI ION PT	Sensor junction box for decentralized periphery PNOZmulti

PSENmag – cable selection for connection to any evaluation device



PSEN cable M8-4sf

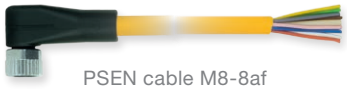

PSEN cable M8-8af

	Type	Description	Cable drag chain capability
4	**PSEN cable M8-4sf**	Cable for connection to any evaluation device	◆
4	**PSEN cable M8-4af**		◆
1	**PSEN cable M8-8sf**		-
1	**PSEN cable M8-8af**		-
2	**PSEN cable M12-8sf**		◆
2	**PSEN cable M12-8af**		◆
3	**PSEN cable M12-5sf**		-

PSENmag – accessory selection for series connection



PSEN ix1

Type	Description
PSEN ix1	Multiple interface (PSEN 1 series), protection type IP20
PSEN i1	Multiple interface (PSEN 2 series), protection type IP20

and PSENmag

Features	Certification	Order number (by length)				
		3 m	5 m	10 m	20 m	30 m
▸ Connection 1: open cable ▸ Connection 2: straight, M12, 5-pin, plug	UL	380705	380709	380706	380707	380708

Features	Certification	Order number
Multiple interface PDP67, protection type IP67, PL e of EN ISO 13849-1, SIL CL 3 of EN/IEC 62061	DGUV, TÜV, UL	773616

Features	Certification	Order number (by length)					
		2 m	3 m	5 m	10 m	20 m	30 m
▸ Connection 1: straight, M8, 4-pin, socket ▸ Connection 2: open cable	UL	533111	-	533121	533131	-	533141
▸ Connection 1: angled, M8, 4-pin, socket ▸ Connection 2: open cable	UL	533110	-	533120	533130	-	533140
▸ Connection 1: straight, M8, 8-pin, socket ▸ Connection 2: open cable	UL	533150	-	533151	533152	533153	533154
▸ Connection 1: angled, M8, 8-pin, socket ▸ Connection 2: open cable	-	-	-	-	533162	-	-
▸ Connection 1: straight, M12, 8-pin, socket ▸ Connection 2: open cable	UL	-	540319	540320	540321	540333	540326
▸ Connection 1: angled, M12, 8-pin, socket ▸ Connection 2: open cable	UL	-	540322	540323	540324	-	540325
▸ Connection 1: straight, M12, 5-pin, socket ▸ Connection 2: open cable	UL	-	630310	630311	630312	630298	630297

Features	Certification	Order number
▸ Series connection up to PL c of EN ISO 13849-1, SIL CL 1 of EN/IEC 62061 ▸ Can be used for connection to: PNOZsigma, PNOZpower, PNOZ X, PNOZmulti, PSS	UL	535120
▸ Series connection up to PL c of EN ISO 13849-1, SIL CL 1 of EN/IEC 62061 ▸ Can be used for connection to: PNOZelog, PNOZmulti, PSS	UL	535110

Selection guide – Cable for PSENmag



PSENmag



PSENmag

PSENmag – cable selection for connection to PDP67 F 8DI ION/PSS67



PSS67/PDP67 cable M12-5sf



PDP67 F 8DI ION PT

	Type	Description	Cable drag chain capability
8	**PSS67/PDP67 cable M12-5sf M12-5sm**	Cable for connection to PDP67 F 8DI ION/PSS67	-
8	**PSS67/PDP67 cable M12-5af M12-5am**		-
	PSS67/PDP67 cable M8-4sf M12-5sm [1]		◆
	PSS67/PDP67 cable M8-4af M12-5am [1]		◆

[1] in addition, adapter 9 is required

	Type	Description
9	**PSEN ma adapter**	Adapter for connecting a PSENmag to PSS67 and PDP67

	Type	Description
	PDP67 F 8DI ION PT	Sensor junction box for decentralized periphery PNOZmulti

PSENmag – cable selection for connection to any evaluation device



PSS67/PDP67 cable M12-5sf

	Type	Description	Cable drag chain capability
	PSEN cable M12-5sf/ M12-5sm VA	Connection cable of a 5-pin sensor with the PDP67 F 8DI ION VA	◆
	PSEN cable M12-5sf VA	Cable for connection to any evaluation device	◆
	PSEN cable M12-8sf VA	Cable for connection to any evaluation device	◆

Features	Certification	Order number (by length)				
		3 m	5 m	10 m	20 m	30 m
▸ Connection 1: straight, M12, 5-pin, socket ▸ Connection 2: straight, M12, 5-pin, plug	UL	380208	380209	380210	380220	380211
▸ Connection 1: angled, M12, 5-pin, socket ▸ Connection 2: angled, M12, 5-pin, plug	UL	380212	380213	380214	-	380215
▸ Connection 1: straight, M8, 4-pin, socket ▸ Connection 2: straight, M12, 4-pin, plug	UL	380200	380201	380202	-	380203
▸ Connection 1: angled, M8, 4-pin, socket ▸ Connection 2: straight, M12, 4-pin, plug	UL	380204	380205	380206	-	380207

Features	Certification	Order number
0.10 m: ▸ Connection 1: M12, 4-pin, female connector, straight ▸ Connection 2: M12, 5-pin, male connector, straight	-	380300

Features	Certification	Order number
Multiple interface PDP67, protection type IP67, PL e of EN ISO 13849-1, SIL CL 3 of EN/IEC 62061	DGUV, TÜV, UL	773616

Features	Certification	Order number (by length)	
		5 m	10 m
▸ Connection 1: Straight, M12, 5-pin, plug ▸ Connection 2: straight, M12, 5-pin, socket ▸ Threaded ring made of stainless steel, IP69K, temperature: -5 °C … 105 °C	UL, ECOLAB	533180	533181
▸ Connection 1: straight, M12, 5-pin, socket ▸ Connection 2: open cable ▸ Threaded ring made of stainless steel, IP69K, temperature: -5 °C … 105 °C	UL, ECOLAB	533170	533171
▸ Connection 1: straight, M12, 8-pin, socket ▸ Connection 2: open cable ▸ Threaded ring made of stainless steel, IP69K, temperature: -5 °C … 105 °C	UL, ECOLAB	533190	533191

Selection guide – Cable for PSENhinge



PSENhinge

PSENhinge – cable selection for connection to any evaluation device



PSEN cable M12-4sf

	Type	Description	Cable drag chain capability
5	**PSEN cable M12-4sf**	Cable for connection to any evaluation device	-
3	**PSEN cable M12-5sf**		-
3	**PSEN cable M12-5af**		-

PSENhinge – cable selection for connection to PDP67 F 8DI ION/PSS67



PSS67/PDP67 cable M12-5sf

	Type	Description	Cable drag chain capability
8	**PSS67/PDP67 cable M12-5sf M12-5sm** [1]	Cable for connection to PDP67 F 8DI ION/PSS67	-
8	**PSS67/PDP67 cable M12-5af M12-5am** [1]		-

[1] in addition, adapter 9 is required



PDP67 F 8DI ION PT

	Type	Description
9	**PSEN ma adapter**	Adapter for connecting a PSENmag or PSENhinge to PSS67 and PDP67

	Type	Description
	PDP67 F 8DI ION PT	Sensor junction box for decentralized periphery PNOZmulti

Features	Certification	Order number (by length)				
		3 m	5 m	10 m	20 m	30 m
▸ Connection 1: straight, M12, 4-pin, socket ▸ Connection 2: open cable	UL	630300	630301	630302	-	630296
▸ Connection 1: straight, M12, 5-pin, socket ▸ Connection 2: open cable	UL	630310	630311	630312	630298	630297
▸ Connection 1: angled, M12, 5-pin, socket ▸ Connection 2: open cable	UL	630347	630348	630349	-	630350

Features	Certification	Order number (by length)				
		3 m	5 m	10 m	20 m	30 m
▸ Connection 1: straight, M12, 5-pin, socket ▸ Connection 2: straight, M12, 5-pin, plug	UL	380208	380209	380210	380220	380211
▸ Connection 1: angled, M12, 5-pin, socket ▸ Connection 2: angled, M12, 5-pin, plug	UL	380212	380213	380214	-	380215

Features	Certification	Order number
0.10 m: ▸ Connection 1: M12, 4-pin, female connector, straight ▸ Connection 2: M12, 5-pin, male connector, straight	-	380300

Features	Certification	Order number
Multiple interface PDP67, protection type IP67, PL e of EN ISO 13849-1, SIL CL 3 of EN/IEC 62061	DGUV, TÜV, UL	773616

Selection guide – Cable for PSENmlock



PSENmlock

PSENmlock – cable selection for connection to any evaluation device



PSEN cable M12-12sf

Type	Description	Cable drag chain capability
PSEN cable M12-12sf	Cable for connection to any evaluation device	-

PSENmlock – cable selection for series connection



PSEN cable M12-12sf

Type	Description	Cable drag chain capability
PSEN cable M12-12sf/ M12-12sm	Connection cable, e.g. for series connection of PSENmlock	-

PSENmlock – adapter selection for series connection



PSEN ml Y junction M12



PSEN ml end adapter

Type	Description
PSEN ml Y junction M12	Y-adapter for PSENmlock series connection
PSEN ml/PSENcs Y junction M12	Y-adapter for looping in a PSENcode in a PSENmlock series connection
PSEN ml end adapter	I-adapter, adapter for PSENmlock series connection, last adapter with the use of a 12-pin PSENmlock as the last sensor in the chain

Features	Certification	Order number (by length)						
		2 m	3 m	5 m	10 m	20 m	30 m	50 m
▸ Connection 1: straight, M12, 12-pin, socket ▸ Connection 2: open cable ▸ Cross section: 0.25 mm² ▸ Rated current: 2 A	UL	570350	570351	570352	570353	570354	570355	570356

Features	Certification	Order number (by length)					
		1 m	2 m	3 m	5 m	10 m	20 m
▸ Connection 1: straight, M12, 12-pin, socket ▸ Connection 2: straight, M12, 12-pin, plug ▸ Cross section: 0.25 mm² ▸ Rated current: 2 A	UL	570357	570358	570359	570360	570361	570362

Features	Certification	Order number
▸ Connector X1: M12, 8-pin male connector ▸ Connector X2: M12, 8-pin, female connector ▸ Connector X3: M12, 12-pin, female connector	-	570486
▸ Connector X1: M12, 8-pin, female connector ▸ Connector X2: M12, 8-pin male connector ▸ Connector X3: M12, 8-pin, female connector	-	570489
▸ Connector X1: M12, 12-pin, female connector ▸ Connector X2: M12, 8-pin male connector	-	570487

Selection guide – Cable for PSENopt and PSENopt II



PSENopt



PSENopt



PSENopt II

PSENopt and PSENopt II – cable selection for connection to any evaluation device



PSEN op cable M12-4sf

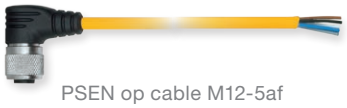

PSEN op cable M12-5af

	Type	Description	Cable drag chain capability
5	**PSEN op cable M12-4sf**	Cable for Type 2 and Type 4 light curtain and single-beam safety light barrier for connection to any evaluation device	-
5	**PSEN op cable M12-4af**		-
3	**PSEN op cable M12-5sf**	Cable for Type 2, Type 3 and Type 4 light curtains for connection to any evaluation device	-
3	**PSEN op cable M12-5af**		-
2	**PSEN op cable M12-8sf**	Cable for Type 2 (body protection) and Type 4 light curtains for connection to any evaluation device	◆
2	**PSEN op cable M12-8af**		◆
	PSEN op cable M12-4sf shielded	Cable for Type 2 and Type 4 light curtains for connection to any evaluation device	-
	PSEN op cable M12-4af shielded		-
	PSEN op cable M12-8sf shielded	Cable for Type 4 light curtain, for connection to any evaluation device	-
	PSEN op cable M12-8af shielded		-

Features	Certification	Order number (by length)					
		3 m	5 m	10 m	20 m	30 m	50 m
▸ Connection 1: unshielded, straight, M12, 4-pin, socket ▸ Connection 2: open cable	UL	630300	630301	630302	-	630296	630362
▸ Connection 1: unshielded, angled, M12, 4-pin, socket ▸ Connection 2: open cable	UL	630341	630342	630343	-	630344	630363
▸ Connection 1: unshielded, straight, M12, 5-pin, socket ▸ Connection 2: open cable	UL	630310	630311	630312	630298	630297	630364
▸ Connection 1: unshielded, angled, M12, 5-pin, socket ▸ Connection 2: open cable	UL	630347	630348	630349	-	630350	630365
▸ Connection 1: unshielded, straight, M12, 8-pin, socket ▸ Connection 2: open cable	UL	540319	540320	540321	540333	540326	-
▸ Connection 1: unshielded, angled, M12, 8-pin, socket ▸ Connection 2: open cable	UL	540322	540323	540324	-	540325	-
▸ Connection 1: shielded, straight, M12, 4-pin, socket ▸ Connection 2: open cable	UL	630303	630304	630305	-	630309	630366
▸ Connection 1: shielded, angled, M12, 4-pin, socket ▸ Connection 2: open cable	UL	630306	630307	630308	-	630319	630367
▸ Connection 1: shielded, straight, M12, 8-pin, socket ▸ Connection 2: open cable	UL	630313	630314	630315	-	630328	630368
▸ Connection 1: shielded, angled, M12, 8-pin, socket ▸ Connection 2: open cable	UL	630316	630317	630318	-	630329	630369

Selection guide – Cable for PSENopt and PSENopt II



PSENopt



PSENopt



PSENopt II

PSENopt and PSENopt II – cable selection for connection to PDP67 F 8DI ION/PSS67



PSS67/PDP67 cable M12-5sf



PDP67 F 8DI ION PT

	Type	Description	Cable drag chain capability
8	**PSS67/PDP67 cable M12-5sf M12-5sm**	▸ Cable for connection to PDP67 F 8DI ION/PSS67 ▸ An additional adapter is required for 8-pin receiver (380 326)	-
8	**PSS67/PDP67 cable M12-5af M12-5am**		-

Type	Description
PSEN op 4F/H Receiver adapter	Adapter for connecting the receivers of the basic light curtains PSENop4F…/1 and PSENop4H…/1 to PDP67, cable length 0.1 m

Type	Description
PDP67 F 8DI ION PT	Sensor junction box for decentralized periphery PNOZmulti
PDP67 F 8DI ION HP	Decentralized input module for PNOZmulti

PSENopt – accessory selection for cascadable light curtains



PSEN op cable M12-4sf shielded



PSEN op cableset M12-4sf shielded

Type	Description	Cable drag chain capability
PSEN op cable axial M12-5sf shielded	Cable for cascading	-
PSEN op cable M12-4sf shielded	Cable for L-muting	-
PSEN op cableset M12-4sf shielded	Y-cable for T-muting	-

Features	Certification	Order number (by length)				
		3 m	5 m	10 m	20 m	30 m
▸ Connection 1: straight, M12, 5-pin, socket ▸ Connection 2: straight, M12, 5-pin, plug	UL	380208	380209	380210	380220	380211
▸ Connection 1: angled, M12, 5-pin, socket ▸ Connection 2: angled, M12, 5-pin, plug	UL	380212	380213	380214	-	380215

Features	Certification	Order number
▸ Connection 1: straight, M12, 8-pin, socket ▸ Connection 2: straight, M12, 5-pin, plug	UL	380326

Features	Certification	Order number
Multiple interface PDP67, protection type IP67, PL e of EN ISO 13849-1, SIL CL 3 of EN/IEC 62061	DGUV, TÜV, UL	773616
Multiple interface PDP67, protection type IP67, PL e of EN ISO 13849-1, SIL CL 3 of EN/IEC 62061, High Power: additional supply voltage	DGUV, TÜV, UL	773601

Features	Order number (by length)		
	0.5 m	0.75 m	1 m
▸ Connection 1: shielded, straight, M12, 5-pin, socket ▸ Connection 2: shielded, straight, M12, 5-pin, socket	630280	-	630281
▸ Connection 1: shielded, straight, M12, 4-pin, socket ▸ Connection 2: shielded, angled, M12, 4-pin, socket	-	630282	-
▸ Connection 1: shielded, straight, M12, 4-pin, socket ▸ Connection 2: 2 x shielded, angled, M12, 4-pin, socket	630295	-	-

Selection guide – Cable for PSENopt Advanced



PSENopt Advanced

PSENopt Advanced – cable selection for connection to any evaluation device



PSEN op cable axial M12 12-pole

Type	Description	Cable drag chain capability
PSEN op cable axial M12 12-pin	Cable for light curtains PSENopt Advanced for connection to any evaluation device	◆
PSEN op cable M12-5sf	Cable for light curtains PSENopt Advanced for connection to any evaluation device	-

Note: The PSENmlock cables can also be used to connect PSENopt Advanced (see page 154).

PSENopt Advanced – cable selection for muting, blanking and cascading

Type	Description
PSEN op Ethernet cable	Ethernet cable for PSEN op Advanced Programming adapter (see page 93)



PSEN op cascading

Type	Description
PSEN op cascading	Cable for cascading



PSEN op pigtail receiver blanking

Type	Description
PSEN op pigtail emitter	Connection cable, transmitter
PSEN op pigtail receiver blanking	Connection cable, receiver, blanking
PSEN op pigtail receiver muting	Connection cable, receiver, muting

Features	Certification	Order number (by length)					
		3 m	5 m	10 m	20 m	30 m	50 m
▸ Connection 1: unshielded, straight, M12, 12-pin, socket ▸ Connection 2: open cable	UL	631 080	631 081	631 082	631 083	631 084	631 085
▸ Connection 1: unshielded, straight, M12, 5-pin, socket ▸ Connection 2: open cable	UL	630 310	630 311	630 312	630 298	630 297	630 364

Features	Order number (by length)		
	1 m	3 m	10 m
▸ Connection 1: RJ45, 4-pin ▸ Connection 2: M12, 4-pin, plug, D-coded	631 071	631 072	631 073

Features	Order number (by length)		
	0.05 m	0.5 m	1 m
▸ Connection 1: 18-pin, system connector ▸ Connection 2: 18-pin, system connector	631 058	631 059	631 060

Features	Order number
	0.2 m
▸ Connection 1: 18-pin, system connector ▸ Connection 2: M12, 5-pin, plug	631 055
▸ Connection 1: 18-pin, system connector ▸ Connection 2: M12, 12-pin, plug	631 056
▸ Connection 1: 18-pin, system connector ▸ Connection 2: M12, 12 and 5-pin, plug	631 057

Selection guide – Cable for PSENopt slim and PSEN

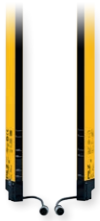

PSENopt slim

PSENopt slim – cable selection and adapter



PSEN op SL cascading

Type	Description
PSEN op SL cascading	Cable for cascading



PSEN op SL adapter

Type	Description
PSEN op SL adapter	2 adapters for connecting PSENopt slim to PDP67 (transmitter/receiver)



PSEN op cable M12-5sf

Type	Description	Cable drag chain capability
PSEN op cable M12-5sf	Unshielded, straight, M12, 5-pin, socket	-



PSENscan

PSENscan – cable selection



PSEN cable axial M12 8-pole

Type	Description	Cable drag chain capability
PSEN cable axial M12 8-pin	I/Os and voltage supply	◆
PSEN op Ethernet cable	Connection cable to PC/network	-
PSEN op cable axial M12 12-pin	Cable for connection to any evaluation device	◆

scan

Features	Certification	Order number (by length)		
		0.1 m	0.5 m	1 m
▸ Connection 1: system connector, 5-pin ▸ Connection 2: straight, M12, 5-pin, socket	-	631 183	631 184	631 185

Features	Certification	Order number
		0.1 m
▸ Connection 1: straight, M12, 5-pin, socket ▸ Connection 2: straight, M12, 5-pin, plug	-	631 187

Features	Certification	Order number (by length)			
		3 m	5 m	10 m	20 m
Open cable	UL	630 310	630 311	630 312	630 298

Features	Certification	Order number (by length)					
		3 m	5 m	10 m	20 m	30 m	50 m
▸ Connection 1: straight, M12, 8-pin, socket ▸ Connection 2: open cable	UL	540 319	540 320	540 321	540 333	540 326	-
▸ Connection 1: RJ45, 4-pin ▸ Connection 2: M12, 4-pin, plug, D-coded	-	631 072	-	631 073	-	-	-
▸ Connection 1: unshielded, straight, M12, 12-pin, socket ▸ Connection 2: open cable	UL	631 080	631 081	631 082	631 083	631 084	631 085

Selection guide – Cable for PSENvip and cable acc



PSENvip 2

PSENvip 2 – cable selection for PSENvip 2 receiver



PSEN cable M12-4sm MIOsm

Type	Description
PSEN cable, M12-4sm MIOsm	Connection cable for PSENvip 2 receiver

Sensor technology PSEN – accessory selection for customizable plugs and sockets



PSEN/PDP67 M12-8sf screw terminals



PSEN/PDP67 M12-8sm screw terminals

Type	Description
PSS67 M12 connector M12-5sf	Connector socket
PSS67 M12 connector M12-5sm	Connector plug
PSS67 M12 connector M12-5af	Connector socket
PSS67 M12 connector M12-5am	Connector plug
PSEN/PDP67 M12-8sf screw terminals	Connector socket
PSEN/PDP67 M12-8sm screw terminals	Connector plug

essories PSEN®

Features	Order number (by length)			
	8 m	10 m	15 m	20 m
▸ Connection 1: shielded, straight, M12, 4-pin, socket ▸ Connection 2: Mini I/O	584569	584570	584571	584572

Features	Certification	Order number
▸ Connection 1: straight, M12, socket ▸ Connection 2: screw terminal suitable for 5-core cable, max. 0.75 mm²	UL	380309
▸ Connection 1: straight, M12, plug ▸ Connection 2: screw terminal suitable for 5-core cable, max. 0.75 mm²	UL	380308
▸ Connection 1: angled, M12, socket ▸ Connection 2: screw terminal suitable for 5-core cable, max. 0.75 mm²	UL	380311
▸ Connection 1: angled, M12, plug ▸ Connection 2: screw terminal suitable for 5-core cable, max. 0.75 mm²	UL	380310
▸ Connection 1: straight, M12, socket ▸ Connection 2: screw terminal suitable for 8-core cable, max. 0.5 mm²	UL	540332
▸ Connection 1: straight, M12, plug ▸ Connection 2: screw terminal suitable for 8-core cable, max. 0.5 mm²	UL	540334

Services:
Consulting, engineering and training

As a solution supplier, Pilz can help you in the global application of optimum safety strategies that comply with specifications. Our services ensure the highest safety for man and machine worldwide.





Training

Pilz supports you with a comprehensive range of training courses on all topics of machinery safety and automation.



Machinery safety

Risk Assessment
We review your machinery in accordance with the applicable standards and directives and assess the existing hazards.

Safety Concept
We develop detailed technical solutions for the safety of your plant and machinery through mechanical, electronic and organizational measures.

Safety Design
The aim of the safety design is to reduce or eliminate danger points through detailed planning of the necessary protective measures.

System Implementation
The results of the risk analysis and safety design are implemented to suit the particular requirements through selected safety measures.

Validation
In the validation, the risk assessment and safety concept are mirrored and inspected by competent, specialist staff.
We can also perform collision measurement for human-robot applications in accordance with the limit values from ISO/TS 15066.



International compliance

CE Marking
We control all activities and processes for the necessary conformity assessment procedure, including the technical documentation that is required.

USA
With us you'll receive all the necessary documents that are required to have your machine certified through local authorities to achieve US compliance.

NR-12
As a complete supplier we can provide support from risk assessment to validation, technical documentation at the manufacturer's and final acceptance at the operator's in Brazil.



Workplace safety

Plant Assessment
We will prepare an overview of your entire plant in the shortest possible time. With an on-site inspection we will expose risks and calculate the cost of optimizing your safeguards.

Lockout Tagout System
Our customized lockout tagout (LoTo) measures guarantee that staff can safely control potentially hazardous energies during maintenance and repair.

Inspection of Safeguarding Devices
With our independent, ISO 17020-compliant inspection body, which is accredited by the German Accreditation Body (DAkkS), we can guarantee objectivity and high availability of your machines.

DAkkS Deutsche Akkreditierungsstelle D-IS-12033-01-00

Pilz GmbH & Co. KG, Ostfildern, operates an inspection body for plant and machinery, accredited by DAkkS.

Index PSEN®

A

Absolute encoder 18, 19
Access monitoring 94
Accessories 142
Area guarding 94
Area monitoring 94, 95
ATEX 26, 29, 31, 32, 34, 37, 40
Automated guided vehicles (AGV) 94

B

Base version 24, 49, 94, 96, 100, 105
Bending angle measurement 100, 104
Blanking 68, 71, 74, 75, 84, 86, 160

C

Cable 138
Camera system 98, 100, 102, 104, 106
Cascading 68, 71, 74, 75, 76, 84, 86, 88, 90, 158, 160, 162
Category 26, 27, 44, 48, 50, 56, 62
Cleaning requirements 26, 27, 35
Coded safety switch 15, 21, 34, 36, 38, 40, 42, 44, 50
Collision measurement set for human-robot collaboration 108, 110
Configurable, safe, small controllers 27, 51, 57, 63, 68, 77, 90, 95, 98, 100, 140
Configurator 69, 74, 93, 94, 96, 125
Control elements 62, 63, 66, 127

D

Decentralized modules PDP67 140, 141
Deflection mirror 92
Diagnostics 14, 15, 27, 42, 43, 48, 51, 56, 57, 69, 71, 73, 74, 75, 77

E

E-STOP 13, 16, 17, 49, 62, 63, 64, 114–129
EN/IEC 60947-5-1 114, 122, 124
EN/IEC 60947-5-5 114, 122
EN/IEC 61496-1/-2 68, 69, 72, 78, 80, 82, 84, 86, 88, 90, 91, 104
EN/IEC 61508 78, 80, 82, 84, 86, 88, 90, 104
EN/IEC 62061 24, 28, 30, 32, 36, 38, 44, 47, 52, 54, 58, 64, 70, 78, 80, 82, 84, 86, 88, 90, 114, 124, 133, 141, 147, 149, 151, 153, 159
EN 12622 101, 103, 104
EN 60947-5-3 24, 26, 28, 30, 34, 47, 52, 54, 58, 64
Enabling switch 63, 134, 135, 136, 137
Energy efficiency 51, 57, 63
EN ISO 13849-1 24, 28, 30, 32, 36, 38, 43, 44, 47, 52, 54, 58, 64, 70, 78, 80, 82, 84, 86, 88, 90, 96, 104, 114, 124, 133, 141, 147, 149, 151, 153, 163
EN ISO 13850 114
EN ISO 14119 20, 21, 22, 26
Escape release 44, 45, 48, 49, 56, 57, 62, 64, 66, 127

F

Force measurement 109, 111
Fully coded 20, 21, 34, 36, 38, 40, 50, 53, 55, 56, 58, 59
Guard locking device 12, 20, 21, 22, 24, 44, 48, 49, 51, 52, 54, 56, 57, 62, 63

H

Hinge switches, safe 13, 20, 21, 46, 47

I

IEC 60204 114, 116, 117
IP20 15, 144, 148
IP54 133
IP65 21, 24, 64, 71, 96, 122, 125, 127, 128, 129, 137
IP67 15, 17, 21, 24, 27, 28, 30, 32, 35, 36, 38, 43, 46, 47, 52, 54, 58, 140, 147, 149, 151, 153, 159
IP6K9K 21, 26, 28, 34, 36, 114, 115, 122, 123
ISO/TS 15066 108, 109

K

Key lock principle 26, 34

L

Light curtain 13, 68–93, 142, 156, 158, 160

M

Magnetic latching 34, 36, 37, 38, 39, 40
Magnetic safety switch 13, 26, 28, 30, 32
Manipulation protection 12, 13, 20, 26, 28, 34, 35, 44, 46, 50, 51, 131
Manually operated control device 134, 136
Mechanical safety switch 13, 21–25, 44
Modular safety gate system 48, 49
Muting 68, 71, 74, 75, 84, 86, 96, 100, 158, 160

O

Operating mode selector switch 112, 130, 132
OSSD 36, 38, 42, 43, 50

P

Passive junction 52, 54, 140, 141, 146
PDP20 28, 30
PDP67 27, 28, 29, 30, 31, 32, 33, 35, 38, 52, 54, 64, 71, 73, 116, 140, 141, 143, 146, 148, 150, 152, 158, 162, 164
PITenable 136, 137
PITestop 114–125
PITestop active 114–125
PITgatebox 48, 57, 126, 128
PITjog 134, 135
PITmode 130, 132
PITmode fusion 130, 132
PITreader 130, 132
PNOZmulti 2 14, 27, 51, 57, 63, 68, 77, 90, 95, 98, 100, 101, 130, 131, 133, 134, 137, 140, 141, 143, 146, 148, 149, 150, 152, 158
PNOZmulti Mini 124, 140, 141, 146, 158
PNOZsigma 15, 17, 23, 35, 45, 47, 77, 140, 149
Position monitoring 12, 16, 17, 18, 19, 20, 26, 34, 42, 43, 142
Position monitoring 24, 26, 28, 30, 34, 36, 38, 47, 48, 52, 54, 58, 64
Press brakes 12, 98, 101, 102, 103
Presses 19
Press retrofit 98, 100, 101
Process guarding 48, 49, 50
Productive version 100, 105
Programmable control system 90
Protection against defeat 45
Protective column 73, 92
PSENbolt 13, 20, 21, 44, 45
PSEN cable 27, 45, 47, 57, 66, 77, 103, 142, 144, 146, 148, 150, 152, 154, 162, 164
PSENcode 12, 13, 14, 15, 20, 21, 26, 27, 34–45, 52, 54, 57, 62, 64, 140, 141, 144, 145, 146, 147, 154
PSENenco 18, 19
PSENhinge 13, 20, 21, 46, 47, 152, 153
PSENmag 13, 20, 21, 26–33, 148, 150, 152
PSENmech 13, 20–25, 44, 148, 149
PSENmlock 13, 14, 15, 48, 49, 56, 57, 58, 59, 60, 61, 127, 154, 155
PSENopt 13, 68, 70, 90, 92, 156, 158
PSENopt Advanced 13, 68, 70, 74, 84, 86, 92, 160
PSENopt II 13, 68, 70, 72, 78, 80, 82, 92, 156, 158
PSENopt slim 13, 68, 70, 76, 88, 90, 92, 162
PSENrope 16, 17, 148, 149
PSENscan 13, 94, 95, 96, 97, 117, 162, 163
PSENsgate 13, 35, 36, 62, 63, 64, 65, 66, 67

PSENslock ___ 13, 35, 36, 48, 50, 52, 54, 62, 64, 127, 140, 144, 146
PSENvip ___ 13, 98, 100, 104, 106
PSENvip 2 ___ 13, 98, 102, 104, 106, 164
PSS 4000 ___ 15, 18, 19, 98, 100, 102, 103, 130, 131, 133, 134
PSS ___ 90, 116, 149
Push-in technology ___ 115
Pushbutton unit ___ 49, 57, 126, 127, 128, 129

▸ **R**
RFID technology ___ 12, 43, 45, 50, 56, 62, 130, 131, 133
Risk assessment ___ 166
Rotary cam arrangement ___ 18, 19
Rotary encoder ___ 18, 19

▸ **S**
Safe Evaluation Unit ___ 130, 131, 132
Safety bolt ___ 13, 20, 21, 44, 45
Safety Device Diagnostics (SDD) ___ 14, 15, 35, 48, 144
Safety gate monitoring ___ 22, 44, 48, 50, 56, 62
Safety gate system ___ 13, 48, 49, 50, 52, 54, 56, 58, 60, 62, 64, 66, 126, 127
Safety laser scanner ___ 13, 94, 95, 96, 97, 117
Safety requirement ___ 12, 20, 23, 47, 51
Semiconductor outputs ___ 34, 50, 56, 72, 84, 86, 124
Series connection ___ 14, 15, 26, 29, 30, 32, 34, 35, 36, 38, 48, 49, 50, 52, 54, 56, 57, 58, 61, 64, 95, 125, 144, 147, 148, 154
Services ___ 166
Stainless steel sensor ___ 27
Standard actuator ___ 23

▸ **T**
Tandem presses ___ 102, 103

▸ **U**
Unique,
fully coded ___ 20, 21, 34, 36, 38, 50, 53, 56, 58, 59, 64, 65

Contact

AT
Pilz Ges.m.b.H.
Sichere Automation
Modecenterstraße 14
1030 Wien
Austria
Telephone: +43 1 7986263-0
Telefax: +43 1 7986264
E-Mail: pilz@pilz.at
Internet: www.pilz.at

AU
Pilz Australia
Safe Automation
Unit 1, 12-14 Miles Street
Mulgrave
Victoria 3170
Australia
Telephone: +61 3 95600621
Telefax: +61 3 95749035
E-Mail: safety@pilz.com.au
Internet: www.pilz.com.au

BE, LU
Pilz Belgium
Safe Automation
Poortakkerstraat 37/0201
9051 Sint-Denijs-Westrem
Belgium
Telephone: +32 9 3217570
Telefax: +32 9 3217571
E-Mail: info@pilz.be
Internet: www.pilz.be

BR
Pilz do Brasil
Automação Segura
Av. Piraporinha, 521
Bairro: Planalto
São Bernardo do Campo – SP
CEP: 09891-000
Brazil
Telephone: +55 11 4126-7290
Telefax: +55 11 4942-7002
E-Mail: pilz@pilz.com.br
Internet: www.pilz.com.br

CA
Pilz Automation Safety Canada L.P.
6695 Millcreek Drive
Mississauga, ON
Canada, L5N 5M4
Telephone: +1 905 821 7459
Telefax: +1 905 821 7459
E-Mail: info@pilz.ca
Internet: www.pilz.ca

CH
Pilz Industrieelektronik GmbH
Gewerbepark Hintermättli
5506 Mägenwil
Switzerland
Telephone: +41 62 88979-32
Telefax: +41 62 88979-40
E-Mail: pilz@pilz.ch
Internet: www.pilz.ch

CN
Pilz Industrial Automation
Trading (Shanghai) Co., Ltd.
Rm. 1702-1704
Yongda International Tower
No. 2277 Long Yang Road
Shanghai 201204
China
Telephone: +86 21 60880878
Telefax: +86 21 60880870
E-Mail: sales@pilz.com.cn
Internet: www.pilz.com.cn

CZ
Pilz Czech s.r.o
Safe Automation
Zelený pruh 95/97
140 00 Praha 4
Czech Republic
Telephone: +420 222 135353
Telefax: +420 296 374788
E-Mail: info@pilz.cz
Internet: www.pilz.cz

DE
Pilz GmbH & Co. KG
Felix-Wankel-Straße 2
73760 Ostfildern
Germany
Telephone: +49 711 3409-0
Telefax: +49 711 3409-133
E-Mail: info@pilz.de
Internet: www.pilz.de

DK
Pilz Skandinavien K/S
Safe Automation
Ellegaardvej 25 D
6400 Sonderborg
Denmark
Telephone: +45 74436332
Telefax: +45 74436342
E-Mail: pilz@pilz.dk
Internet: www.pilz.dk

ES
Pilz Industrieelektronik S.L.
Safe Automation
Camí Ral, 130
Polígono Industrial Palou Nord
08401 Granollers
Spain
Telephone: +34 938497433
Telefax: +34 938497544
E-Mail: pilz@pilz.es
Internet: www.pilz.es

FI
Pilz Skandinavien K/S
Safe Automation
Nuijamiestentie 7
00400 Helsinki
Finland
Telephone: +358 10 3224030
Telefax: +358 9 27093709
E-Mail: pilz.fi@pilz.dk
Internet: www.pilz.fi

FR
Pilz France Electronic
1, rue Jacob Mayer
CS 80012
67037 Strasbourg Cedex 2
France
Telephone Sales Department:
+33 3 88104001
Telephone Order Processing:
+33 3 88104002
Telefax: +33 3 88108000
E-Mail: siege@pilz-france.fr
Internet: www.pilz.fr

GB
Pilz Automation Ltd
Pilz House
Little Colliers Field
Corby, Northants
NN18 8TJ
United Kingdom
Telephone: +44 1536 460766
Telefax: +44 1536 460866
E-Mail: sales@pilz.co.uk
Internet: www.pilz.co.uk

ID
Pilz South East Asia Pte. Ltd.
25 International Business Park
#04-56 German Centre
Singapore 609916
Singapore
Telephone: +65 6839 292-0
Telefax: +65 6839 292-1
E-Mail: sales@pilz.sg
Internet: www.pilz.sg

IE
Pilz Ireland Industrial Automation
Cork Business and Technology Park
Model Farm Road
Cork
Ireland
Telephone: +353 21 4346535
Telefax: +353 21 4804994
E-Mail: sales@pilz.ie
Internet: www.pilz.ie

IN
Pilz India Pvt. Ltd
6th Floor, 'Cybernex'
Shankar Sheth Road, Swargate
Pune 411042
India
Telephone: +91 20 49221100/-1/-2
Telefax: +91 20 49221103
E-Mail: info@pilz.in
Internet: www.pilz.in

IT, MT
Pilz Italia S.r.l.
Automazione sicura
Via Gran Sasso n. 1
20823 Lentate sul Seveso (MB)
Italy
Telephone: +39 0362 1826711
Telefax: +39 0362 1826755
E-Mail: info@pilz.it
Internet: www.pilz.it

JP
Pilz Japan Co., Ltd.
Safe Automation
Ichigo Shin-Yokohama Bldg. 4F
3-17-5 Shin-Yokohama
Kohoku-ku
222-0033 Yokohama
Japan
Telephone: +81 45 471-2281
Telefax: +81 45 471-2283
E-Mail: pilz@pilz.co.jp
Internet: www.pilz.jp

KH
Pilz South East Asia Pte. Ltd.
25 International Business Park
#04-56 German Centre
Singapore 609916
Singapore
Telephone: +65 6839 292-0
Telefax: +65 6839 292-1
E-Mail: sales@pilz.sg
Internet: www.pilz.sg

Headquarters:
Pilz GmbH & Co. KG, Felix-Wankel-Straße 2, 73760 Ostfildern, Germany
Telephone: +49 711 3409-0, Telefax: +49 711 3409-133, E-Mail: info@pilz.de, Internet: www.pilz.com

KR
Pilz Korea Ltd.
Safe Automation
4FL, Elentec bldg.,
17 Pangyoro-228 Bundang-gu
Seongnam-si
Gyunggi-do
South Korea 13487
Telephone: +82 31 778 3300
Telefax: +82 31 778 3399
E-Mail: info@pilzkorea.co.kr
Internet: www.pilz.co.kr

LA
Pilz South East Asia Pte. Ltd.
25 International Business Park
#04-56 German Centre
Singapore 609916
Singapore
Telephone: +65 6839 292-0
Telefax: +65 6839 292-1
E-Mail: sales@pilz.sg
Internet: www.pilz.sg

MX
Pilz de México, S. de R.L. de C.V.
Automatización Segura
Convento de Actopan 36
Jardines de Santa Mónica
Tlalnepantla, Méx. 54050
Mexico
Telephone: +52 55 5572 1300
Telefax: +52 55 5572 1300
E-Mail: info@pilz.com.mx
Internet: www.pilz.mx

MY
Pilz South East Asia Pte. Ltd.
25 International Business Park
#04-56 German Centre
Singapore 609916
Singapore
Telephone: +65 6839 292-0
Telefax: +65 6839 292-1
E-Mail: sales@pilz.sg
Internet: www.pilz.sg

NL
Pilz Nederland
Veilige automatisering
Havenweg 22
4131 NM Vianen
Netherlands
Telephone: +31 347 320477
Telefax: +31 347 320485
E-Mail: info@pilz.nl
Internet: www.pilz.nl

NZ
Pilz New Zealand
Safe Automation
Unit 4, 12 Laidlaw Way
East Tamaki
Auckland 2016
New Zealand
Telephone: +64 9 6345350
Telefax: +64 9 6345352
E-Mail: office@pilz.co.nz
Internet: www.pilz.co.nz

PH
Pilz South East Asia Pte. Ltd.
25 International Business Park
#04-56 German Centre
Singapore 609916
Singapore
Telephone: +65 6839 292-0
Telefax: +65 6839 292-1
E-Mail: sales@pilz.sg
Internet: www.pilz.sg

PL, BY, UA
Pilz Polska Sp. z o.o.
Safe Automation
ul. Ruchliwa 15
02-182 Warszawa
Poland
Telephone: +48 22 8847100
Telefax: +48 22 8847109
E-Mail: info@pilz.pl
Internet: www.pilz.pl

PT
Pilz Industrieelektronik S.L.
Edifício Tower Plaza
Rotunda Eng. Egdar Cardoso
Nº 23, 5º - Sala E
4400-676 Vila Nova de Gaia
Portugal
Telephone: +351 229407594
E-Mail: info@pilz.pt
Internet: www.pilz.pt

RU
Pilz RUS OOO
Ugreshskaya street, 2,
bldg. 11, office 16 (1st floor)
115088 Moskau
Russian Federation
Telephone: +7 495 665 4993
E-Mail: pilz@pilzrussia.ru
Internet: www.pilzrussia.ru

SE
Pilz Skandinavien K/S
Safe Automation
Smörhålevägen 3
43442 Kungsbacka
Sweden
Telephone: +46 300 13990
Telefax: +46 300 30740
E-Mail: pilz.se@pilz.dk
Internet: www.pilz.se

SG
Pilz South East Asia Pte. Ltd.
25 International Business Park
#04-56 German Centre
Singapore 609916
Singapore
Telephone: +65 6839 292-0
Telefax: +65 6839 292-1
E-Mail: sales@pilz.sg
Internet: www.pilz.sg

SK
Pilz Slovakia s.r.o.
Štúrova 101
05921 Svit
Slovakia
Telephone: +421 52 7152601
E-Mail: info@pilzslovakia.sk
Internet: www.pilzslovakia.sk

TH
Pilz South East Asia Pte. Ltd.
25 International Business Park
#04-56 German Centre
Singapore 609916
Singapore
Telephone: +65 6839 292-0
Telefax: +65 6839 292-1
E-Mail: sales@pilz.sg
Internet: www.pilz.sg

TR
Pilz Emniyet Otomasyon
Ürünleri ve Hizmetleri Tic. Ltd. Şti.
Kayışdağı Mahallesi Dudullu Yolu Cad.
Mecnun Sok. Duru Plaza No:7
34755 Ataşehir/İstanbul
Turkey
Telephone: +90 216 5775550
Telefax: +90 216 5775549
E-Mail: info@pilz.com.tr
Internet: www.pilz.com.tr

TW
Pilz Taiwan Ltd.
10F., No. 36, Sec. 3, Bade Rd.
Songshan Dist., Taipei City 10559
Taiwan
Telephone: +886 2 2570 0068
Telefax: +886 2 2570 0078
E-Mail: info@pilz.tw
Internet: www.pilz.tw

US
Pilz Automation Safety L.P.
7150 Commerce Boulevard
Canton
Michigan 48187
USA
Telephone: +1 734 354 0272
Telefax: +1 734 354 3355
E-Mail: info@pilzusa.com
Internet: www.pilz.us

VN
Pilz South East Asia Pte. Ltd.
25 International Business Park
#04-56 German Centre
Singapore 609916
Singapore
Telephone: +65 6839 292-0
Telefax: +65 6839 292-1
E-Mail: sales@pilz.sg
Internet: www.pilz.sg

Support

Technical support is available from Pilz round the clock.

Americas
Brazil
+55 11 97569-2804
Canada
+1 888 315 7459
Mexico
+52 55 5572 1300
USA (toll-free)
+1 877-PILZUSA (745-9872)

Asia
China
+86 21 60880878-216
Japan
+81 45 471-2281
South Korea
+82 31 778 3300

Australia
+61 3 95600621

Europe
Austria
+43 1 7986263-0
Belgium, Luxembourg
+32 9 3217570
France
+33 3 88104003
Germany
+49 711 3409-444
Ireland
+353 21 4804983
Italy, Malta
+39 0362 1826711
Scandinavia
+45 74436332
Spain
+34 938497433
Switzerland
+41 62 88979-32
The Netherlands
+31 347 320477
Turkey
+90 216 5775552
United Kingdom
+44 1536 462203

You can reach our international hotline on:
+49 711 3409-444
support@pilz.com

Pilz develops environmentally-friendly products using ecological materials and energy-saving technologies. Offices and production facilities are ecologically designed, environmentally-aware and energy-saving. So Pilz offers sustainability, plus the security of using energy-efficient products and environmentally-friendly solutions.

Energy saving by Pilz

BLUECOMPETENCE Alliance Member
Partner of the Engineering Industry Sustainability Initiative

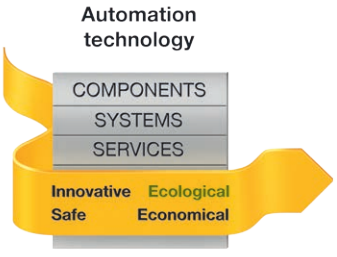







Presented by:

In many countries we are represented by sales partners. Please refer to our homepage www.pilz.com for further details or contact our headquarters.

Printed on 100 % recycled paper for the good of the environment.

PILZ
THE SPIRIT OF SAFETY

7-4-us-3-022, 2019-05 Printed in Germany
© Pilz GmbH & Co. KG, 2019

CECE®, CHRE®, CMSE®, InduraNET p®, Leansafe®, Master of Safety®, PAS4000®, PAScal®, PASconfig®, Pilz®, PIT®, PLID®, PMCprimo®, PMCprotego®, PMCtendo®, PMD®, PMI®, PNOZ®, PRBT®, PRCM®, Primo®, PRTM®, PSEN®, PSS®, PVIS®, SafetyBUS p®, SafetyEYE®, SafetyNET p®, THE SPIRIT OF SAFETY® are registered and protected trademarks of Pilz GmbH & Co. KG in some countries. We would point out that product features may vary from the details stated in this document, depending on the status at the time of publication and the scope of the equipment. We accept no responsibility for the validity, accuracy and entirety of the text and graphics presented in this information. Please contact our Technical Support if you have any questions.